PARTS LIST

CAUTION

- The parts identified by the ⚠ symbol are important for the safety . Whenever replacing these parts, be sure to use specified ones to secure the safety .
- The parts not indicated in this Parts List and those which are filled with lines --- in the Parts No. columns will not be supplied .
- P. W. Board Ass'y will not be supplied, but those which are filled with the Parts No. in the Parts No. columns will be supplied .

ABBREVIATIONS OF RESISTORS, CAPACITORS AND TOLERANCES

RESISTORS		CAPACITORS	
C R	Carbon Resistor	C CAP.	Ceramic Capacitor
F R	Fusible Resistor	E CAP.	Electrolytic Capacitor
P R	Plate Resistor	M CAP.	Mylar Capacitor
V R	Variable Resistor	HV CAP.	High Voltage Capacitor
HV R	High Voltage Resistor	MF CAP.	Metalized Film Capacitor
MF R	Metal Film Resistor	MM CAP.	Metalized Mylar Capacitor
MG R	Metal Glazed Resistor	MP CAP.	Metalized Polystyrol Capacitor
MP R	Metal Plate Resistor	PP CAP.	Polypropylene Capacitor
OM R	Metal Oxide Film Resistor	PS CAP.	Polystyrol Capacitor
CMF R	Coating Metal Film Resistor	TF CAP.	Thin Film Capacitor
UNF R	Non-Flammable Resistor	MPP CAP.	Metalized Polypropylene Capacitor
CH V R	Chip Variable Resistor	TAN. CAP.	Tantalum Capacitor
CH MG R	Chip Metal Glazed Resistor	CH C CAP.	Chip Ceramic Capacitor
COMP. R	Composition Resistor	BP E CAP.	Bi-Polar Electrolytic Capacitor
LPTC R	Linear Positive Temperature Coefficient Resistor	CH AL E CAP.	Chip Aluminum Electrolytic Capacitor
		CH AL BP CAP.	Chip Aluminum Bi-Polar Capacitor
		CH TAN. E CAP.	Chip Tantalum Electrolytic Capacitor
		CH AL BP E CAP.	Chip Tantalum Bi-Polar Electrolytic Capacitor

RESISTORS									
F	G	J	K	M	N	R	H	Z	P
±1%	±2%	±5%	±10%	±20%	±30%	+30% -10%	+50% -10%	+80% -20%	+100% 0%

CONTENTS

USING P.W. BOARD 78
EXPLODED VIEW PARTS LIST - I 79
EXPLODED VIEW - I 79
EXPLODED VIEW PARTS LIST - II 80
EXPLODED VIEW - II 81

PRINTED WIRING BOARD PARTS LIST 82
SIGNAL PW BOARD ASS'Y 82
MAIN PW BOARD ASS'Y 84
S. CORRECTION PW BOARD ASS'Y 86
CRT SOCKET PW BOARD ASS'Y 87
FRONT CONTROL PW BOARD ASS'Y 88
FRONT VR PW BOARD ASS'Y 89
MOTHER PW BOARD ASS'Y 89
TALLY PW BOARD ASS'Y 90
REMOTE PW BOARD ASS'Y 90
SUB DEF PW BOARD ASS'Y 90
HV CONTROL PW BOARD ASS'Y 90

PACKING / PACKING PARTS LIST 91

EXPLODED VIEW PARTS LIST / EXPLODED VIEW [OPTION] 92

PRINTED WIRING BOARD PARTS LIST [OPTION] 93
VIDEO PW BOARD ASS'Y 93
COMPO PW BOARD ASS'Y 95

PACKING [OPTION] / PACKING PARTS LIST [OPTION] 96

USING P.W. BOARD

P.W.B ASS'Y \ Model	DT-V1700CG (E)
SIGNAL PW BOARD	FX-1146A
MAIN PW BOARD	FX-2067A
S. CORRECTION PW BOARD	FX-2110A
CRT SOCKET PW BOARD	FX-3061A
FRONT CONTROL PW BOARD	FX-4065A
FRONT VR PW BOARD	FX-5022A
MOTHER PW BOARD	FX-6069B
TALLY PW BOARD	FX-7011A
REMOTE PW BOARD	FX-8016A
SUB DEF PW BOARD	FX-M017A
HV CONTROL PW BOARD	FX-M018A
VIDEO PW BOARD (OPTION) [IF-C01PNG]	FX-M015A
COMPO PW BOARD (OPTION) [IF-C01COMG]	FX-M016A

EXPLODED VIEW PARTS LIST- I

⚠	Ref.No.	Part No.	Part Name	Description	Local
⚠	1	LC20620-001B	CONTROL BASE		
	2	LC31229-002A	CONTROL SHEET		
	3	LC31230-001A	SHEET		
	4	LC40814-001A	PUSH KNOB	(× 13)	
	5	CM46758-004	VOLUME KNOB	(× 4)	
	6	QYSBSFG3010Z	TAPPING SCREW	(× 3)	
	7	QYSBSF4012Z	TAPPING SCREW	(× 5)	
	8	CM48149-A01	JVC MARK		

EXPLODED VIEW I

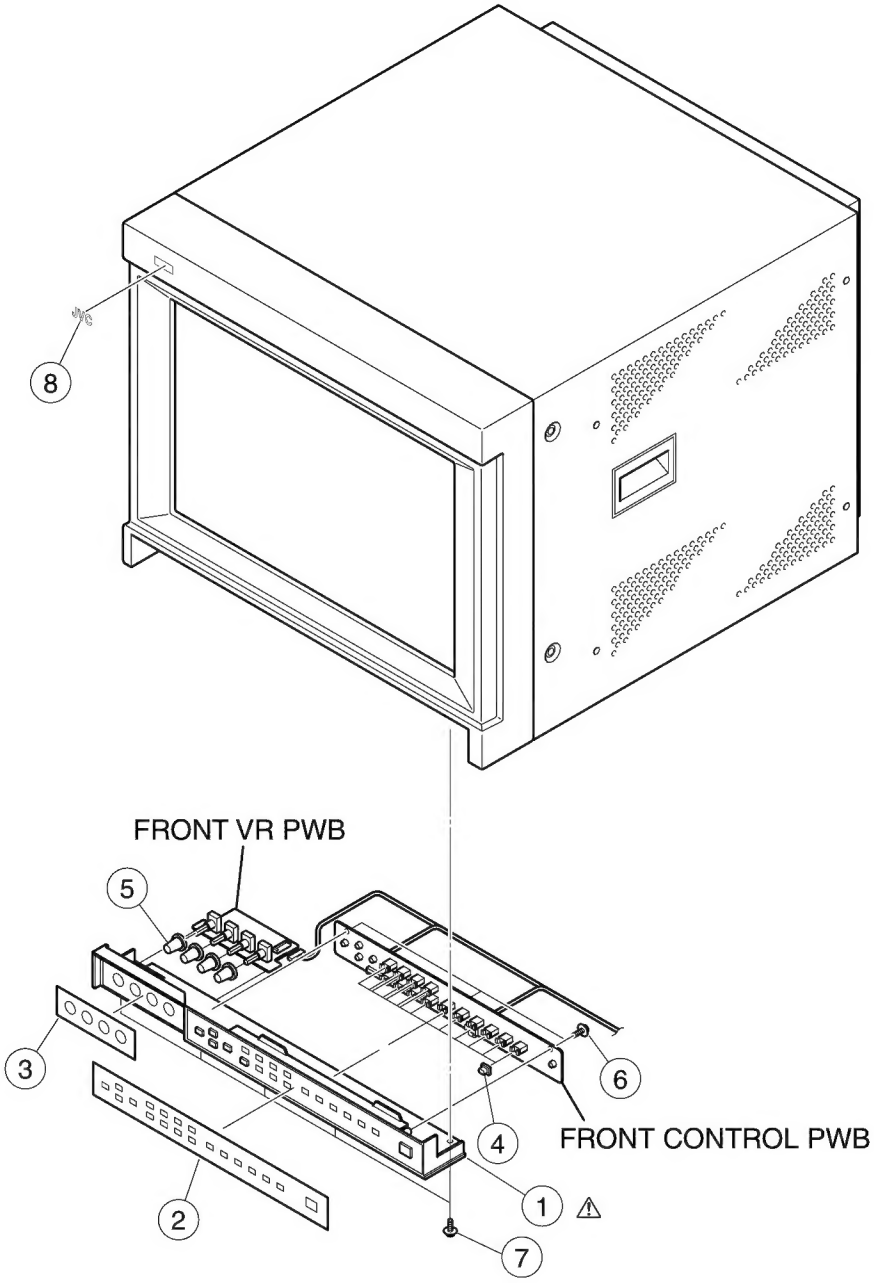

EXPLODED VIEW PARTS LIST-II

⚠	Ref.No.	Part No.	Part Name	Description	Local
⚠	L01	QQW0112-001	DEGAUSSING COIL		
⚠	V01	M41LRY31X22	PICTURE TUBE (ITC)		
⚠	T2503	QQH0087-001	HIGH VOLTAGE TRANSF.		
⚠	9	LC10868-001B	CHASSIS BASE		
	10	CEBSS08P-01KJ2	SPEAKER	SP01	
	11	QZW0046-001	GUIDE RAIL	(×6)	
⚠	12	QSW0699-001	SEESAW SWITCH	S01	
⚠	13	QMCB004-001	3P AC INLET	J01	
⚠	14	QQR0490-001	NOISE FILTER		
⚠	15	LC10867-001B	FRONT PANEL		
	16	LC40815-001A	LENS		
	17	QYSBSFG3010Z	TAPPING SCREW	(×2)	
	18	CHGT0011-AA-N	WIRE		
	19	CHM2032-045-FH	DEG CLAMP	(×4)	
	20	CM48275-001	ASSY SCREW	(×4)	
⚠	21	CM30964-001	SPACER RING	(×2)	
⚠	22	LC11052-001A-C	BOTTOM COVER		
	23	CM47686-00A	FOOT	(×4)	
⚠	24	LC11053-001A-C	REAR COVER		
	25	QYSBSF4012Z	TAPPING SCREW	(×2)	
	26	CM44287-00C	ASSY SCREW	(×6)	
	27	CM44287-00E	ASSY SCREW	(×6)	
	28	LC31464-003A-C	SLOT PANEL	(×3)	
⚠	29	LC21007-002	RATING LABEL		
⚠	30	LC31318-001B	HANDLE	(×2)	
⚠	31	LC10270-010A-H	TOP COVER		
	32	CM44287-00C	ASSY SCREW	(×8)	
⚠	33	CM44287-00E	ASSY SCREW		
⚠	34	QQR0942-001	FILTER		

EXPLODED VIEW-II

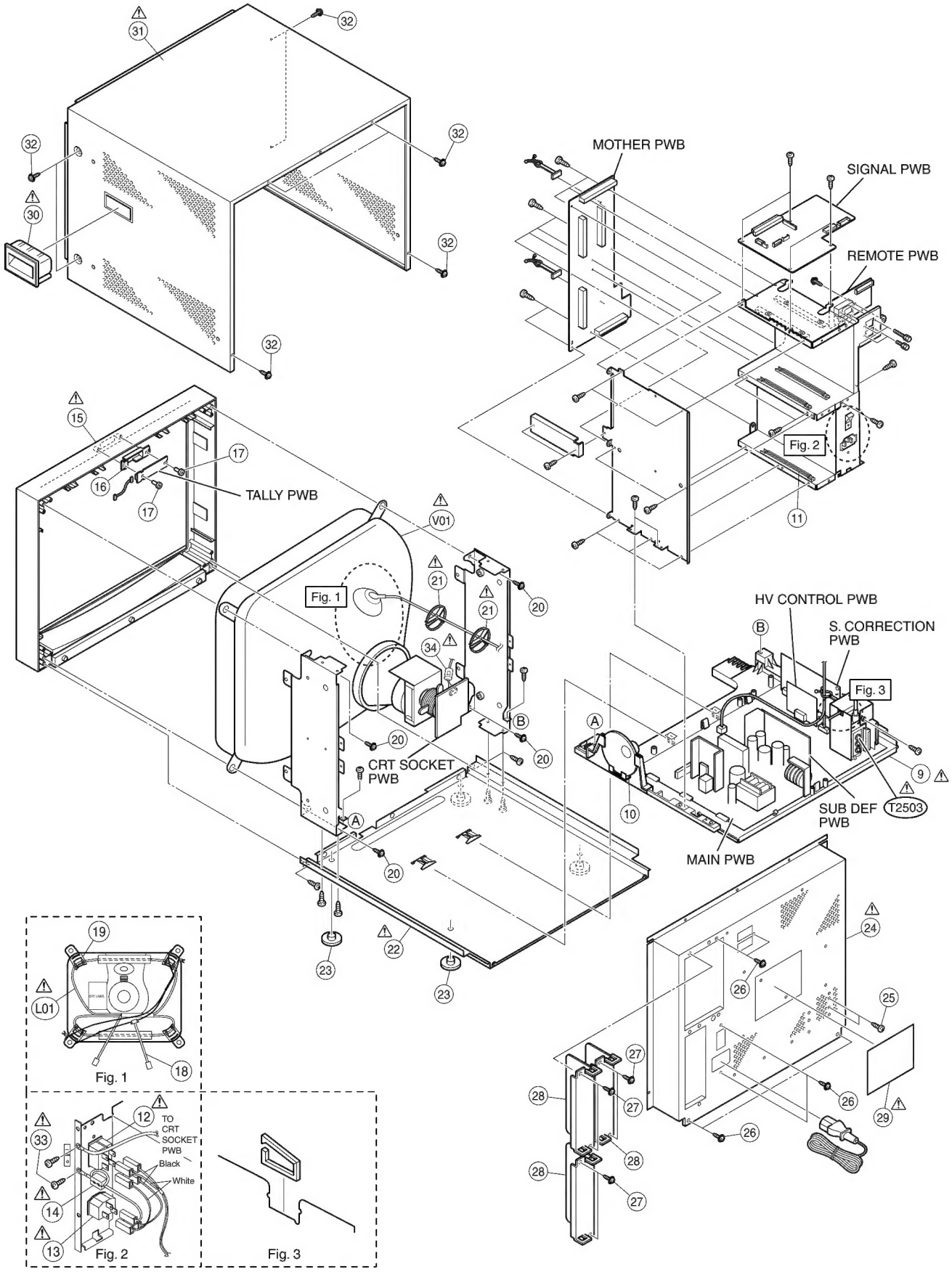

PRINTED WIRING BOARD PARTS LIST

SIGNAL PW BOARD ASS'Y (FX-1146A)

RESISTOR

⚠ Symbol No.	Part No.	Part Name	Description		Local
R1101-03	NRSA02J-101X	MG R	100Ω	1/10W	J
R1104	NRSA02J-104X	MG R	100kΩ	1/10W	J
R1105	NRSA02J-823X	MG R	82kΩ	1/10W	J
R1106	NRSA02J-473X	MG R	47kΩ	1/10W	J
R1107	NRSA02J-273X	MG R	27kΩ	1/10W	J
R1108-10	NRSA02J-102X	MG R	1kΩ	1/10W	J
R1111	NRSA02J-183X	MG R	18kΩ	1/10W	J
R1112-13	NRSA02J-101X	MG R	100Ω	1/10W	J
R1114	NRSA02J-102X	MG R	1kΩ	1/10W	J
R1120	NRSA02J-822X	MG R	8.2kΩ	1/10W	J
R1121	NRSA02J-272X	MG R	2.7kΩ	1/10W	J
R1122	NRSA02J-182X	MG R	1.8kΩ	1/10W	J
R1123	NRSA02J-122X	MG R	1.2kΩ	1/10W	J
R1124-26	NRSA02J-272X	MG R	2.7kΩ	1/10W	J
R1131-34	NRSA02J-101X	MG R	100Ω	1/10W	J
R1135	NRSA02J-0R0X	MG R	0.0Ω	1/10W	J
R1136	NRSA02J-103X	MG R	10kΩ	1/10W	J
R1137	NRSA02J-102X	MG R	1kΩ	1/10W	J
R1138	NRSA02J-103X	MG R	10kΩ	1/10W	J
R1139	NRSA02J-102X	MG R	1kΩ	1/10W	J
R1140	NRSA02J-103X	MG R	10kΩ	1/10W	J
R1141	NRSA02J-0R0X	MG R	0.0Ω	1/10W	J
R1142	NRSA02J-0R0X	MG R	0.0Ω	1/10W	J
R1143-49	NRSA02J-102X	MG R	1kΩ	1/10W	J
R1150	NRSA02J-103X	MG R	10kΩ	1/10W	J
R1151	NRSA02J-102X	MG R	1kΩ	1/10W	J
R1161	NRSA02J-103X	MG R	10kΩ	1/10W	J
R1162-63	NRSA02J-221X	MG R	220Ω	1/10W	J
R1165	NRSA02J-0R0X	MG R	0.0Ω	1/10W	J
R1166	NRSA02J-102X	MG R	1kΩ	1/10W	J
R1168	NRSA02J-391X	MG R	390Ω	1/10W	J
R1170	NRSA02J-332X	MG R	3.3kΩ	1/10W	J
R1171-72	NRSA02J-0R0X	MG R	0.0Ω	1/10W	J
R1175	NRSA02J-472X	MG R	4.7kΩ	1/10W	J
R1176	NRSA02J-221X	MG R	220Ω	1/10W	J
R1177-79	NRSA02J-102X	MG R	1kΩ	1/10W	J
R1601	NRSA02J-101X	MG R	100Ω	1/10W	J
R1602	NRSA02J-561X	MG R	560Ω	1/10W	J
R1603-04	NRSA02J-272X	MG R	2.7kΩ	1/10W	J
R1605	NRSA02J-561X	MG R	560Ω	1/10W	J
R1606	NRSA02J-272X	MG R	2.7kΩ	1/10W	J
R1607	NRSA02J-101X	MG R	100Ω	1/10W	J
R1608	NRSA02J-272X	MG R	2.7kΩ	1/10W	J
R1609	NRSA02J-101X	MG R	100Ω	1/10W	J
R1610	NRSA02J-561X	MG R	560Ω	1/10W	J
R1611-12	NRSA02J-272X	MG R	2.7kΩ	1/10W	J
R1613	NRSA02J-561X	MG R	560Ω	1/10W	J
R1614	NRSA02J-272X	MG R	2.7kΩ	1/10W	J
R1615	NRSA02J-101X	MG R	100Ω	1/10W	J
R1616	NRSA02J-272X	MG R	2.7kΩ	1/10W	J
R1617	NRSA02J-101X	MG R	100Ω	1/10W	J
R1618	NRSA02J-561X	MG R	560Ω	1/10W	J
R1619-20	NRSA02J-272X	MG R	2.7kΩ	1/10W	J
R1621	NRSA02J-561X	MG R	560Ω	1/10W	J
R1622	NRSA02J-272X	MG R	2.7kΩ	1/10W	J
R1623	NRSA02J-101X	MG R	100Ω	1/10W	J
R1624	NRSA02J-272X	MG R	2.7kΩ	1/10W	J
R1625	NRSA02J-102X	MG R	1kΩ	1/10W	J
R1626-28	NRSA02J-563X	MG R	56kΩ	1/10W	J
R1629	NRSA02J-333X	MG R	33kΩ	1/10W	J
R1630	NRSA02J-272X	MG R	2.7kΩ	1/10W	J
R1631	NRSA02J-391X	MG R	390Ω	1/10W	J
R1632	NRSA02J-101X	MG R	100Ω	1/10W	J
R1633-34	NRSA02J-0R0X	MG R	0.0Ω	1/10W	J
R1635	NRSA02J-103X	MG R	10kΩ	1/10W	J
R1636-41	NRSA02J-101X	MG R	100Ω	1/10W	J
R1642	NRSA02J-332X	MG R	3.3kΩ	1/10W	J
R1644-46	NRSA02J-102X	MG R	1kΩ	1/10W	J
R1647-49	NRSA02J-101X	MG R	100Ω	1/10W	J
R1650	NRSA02J-0R0X	MG R	0.0Ω	1/10W	J
R1651-52	NRSA02J-562X	MG R	5.6kΩ	1/10W	J
R1653-55	NRSA02J-392X	MG R	3.9kΩ	1/10W	J

RESISTOR

⚠ Symbol No.	Part No.	Part Name	Description		Local
R1656-58	NRSA02J-271X	MG R	270Ω	1/10W	J
R1659	NRSA02J-561X	MG R	560Ω	1/10W	J
R1660	NRSA02J-473X	MG R	47kΩ	1/10W	J
R1663	NRSA02J-0R0X	MG R	0.0Ω	1/10W	J
R1664	NRSA02J-102X	MG R	1kΩ	1/10W	J
R1671	NRSA02J-562X	MG R	5.6kΩ	1/10W	J
R1672-73	NRSA02J-0R0X	MG R	0.0Ω	1/10W	J
R1674	NRSA02J-153X	MG R	15kΩ	1/10W	J
R1675-76	NRSA02J-183X	MG R	18kΩ	1/10W	J
R1677	NRSA02J-0R0X	MG R	0.0Ω	1/10W	J
R1678	NRSA02J-153X	MG R	15kΩ	1/10W	J
R1679-80	NRSA02J-183X	MG R	18kΩ	1/10W	J
R1681	NRSA02J-0R0X	MG R	0.0Ω	1/10W	J
R1682	NRSA02J-153X	MG R	15kΩ	1/10W	J
R1683-84	NRSA02J-183X	MG R	18kΩ	1/10W	J
R1685-90	NRSA02J-561X	MG R	560Ω	1/10W	J
R1691	NRSA02J-154X	MG R	150kΩ	1/10W	J
R1692	NRSA02J-184X	MG R	180kΩ	1/10W	J
R1815-20	NRSA02J-101X	MG R	100Ω	1/10W	J
R1825-28	NRSA02J-472X	MG R	4.7kΩ	1/10W	J
R1829	NRSA02J-101X	MG R	100Ω	1/10W	J
R1833-36	NRSA02J-101X	MG R	100Ω	1/10W	J
R1846-47	NRSA02J-101X	MG R	100Ω	1/10W	J
R1848	NRSA02J-103X	MG R	10kΩ	1/10W	J
R1850-56	NRSA02J-103X	MG R	10kΩ	1/10W	J
R1859	NRSA02J-101X	MG R	100Ω	1/10W	J
R1860	NRSA02J-103X	MG R	10kΩ	1/10W	J
R1861	NRSA02J-101X	MG R	100Ω	1/10W	J
R1869	NRSA02J-103X	MG R	10kΩ	1/10W	J
R1875-77	NRSA02J-103X	MG R	10kΩ	1/10W	J
R1882	NRSA02J-101X	MG R	100Ω	1/10W	J
R1890-91	NRSA02J-101X	MG R	100Ω	1/10W	J
R1897-98	NRSA02J-472X	MG R	4.7kΩ	1/10W	J
R1901-07	NRSA02J-101X	MG R	100Ω	1/10W	J
R1910	NRSA02J-0R0X	MG R	0.0Ω	1/10W	J
R1911	NRSA02J-472X	MG R	4.7kΩ	1/10W	J
R1912	NRSA02J-272X	MG R	2.7kΩ	1/10W	J
R1913	NRSA02J-223X	MG R	22kΩ	1/10W	J
R1914-16	NRSA02J-473X	MG R	47kΩ	1/10W	J
R1917-18	NRSA02J-101X	MG R	100Ω	1/10W	J
R1919-20	NRSA02J-472X	MG R	4.7kΩ	1/10W	J
RA1131-34	NRZ0040-103X	NET. R	10kΩ		
RA1135-36	NRZ0040-101X	NET. R	100Ω		
RA1801-02	NRZ0040-101X	NET. R	100Ω		
RA1803-05	NRZ0040-103X	NET. R	10kΩ		
RA1806-09	NRZ0040-101X	NET. R	100Ω		
RA1810	NRZ0040-103X	NET. R	10kΩ		
RA1811-14	NRZ0040-101X	NET. R	100Ω		

CAPACITOR

C1104	NEN51HM-105X	CH AL BP E CAP.	1μF	50V	M
C1105	NEN51CM-475X	CH AL BP E CAP.	4.7μF	16V	M
C1106	NEH71EM-475X	E CAP.	4.7μF	25V	M
C1107	NEN51CM-475X	CH AL BP E CAP.	4.7μF	16V	M
C1108	NEH71EM-475X	E CAP.	4.7μF	25V	M
C1109	NCB21HK-472X	C CAP.	4700pF	50V	K
C1110	NCB21EK-683X	C CAP.	0.068μF	25V	K
C1111	NEH71CM-106X	E CAP.	10μF	16V	M
C1112	NCB21HK-103X	C CAP.	0.01μF	50V	K
C1113	NDC21HJ-121X	C CAP.	120pF	50V	J
C1114	NDC21HJ-820X	C CAP.	82pF	50V	J
C1115	NEH70JM-107X	E CAP.	100μF	6.3V	M
C1116	NCF21HZ-103X	C CAP.	0.01μF	50V	Z
C1117	NEH71CM-106X	E CAP.	10μF	16V	M
C1118	NCF21HZ-103X	C CAP.	0.01μF	50V	Z
C1119	NDC21HJ-101X	C CAP.	100pF	50V	J
C1121	NEH71CM-476X	E CAP.	47μF	16V	M
C1122	NDC21HJ-330X	C CAP.	33pF	50V	J
C1123	NCB21HK-102X	C CAP.	1000pF	50V	K
C1131-32	NCF21HZ-104X	C CAP.	0.1μF	50V	Z
C1133	NDC21HJ-100X	C CAP.	10pF	50V	J

CAPACITOR

⚠	Symbol No.	Part No.	Part Name	Description		Local
	C1134	NDC21HJ-271X	C CAP.	270pF	50V	J
	C1141	NEH70JM-107X	E CAP.	100μF	6.3V	M
	C1142-49	NCF21HZ-104X	C CAP.	0.1μF	50V	Z
	C1150	NCB21HK-103X	C CAP.	0.01μF	50V	K
	C1151	NCB21HK-152X	C CAP.	1500pF	50V	K
	C1162	NEH70GM-227X	E CAP.	220μF	4V	M
	C1163	NCF21HZ-224X	C CAP.	0.22μF	50V	Z
	C1165-66	NCF21HZ-104X	C CAP.	0.1μF	50V	Z
	C1167-68	NEH71CM-106X	E CAP.	10μF	16V	M
	C1169-70	NCF21HZ-104X	C CAP.	0.1μF	50V	Z
	C1171	NDC21HJ-220X	C CAP.	22pF	50V	J
	C1172	NDC21HJ-271X	C CAP.	270pF	50V	J
	C1601-04	NEN51AM-336X	CH AL BP E CAP.	33μF	10V	M
	C1605	QETN1HM-225Z	E CAP.	2.2μF	50V	M
	C1606-09	NEN51AM-336X	CH AL BP E CAP.	33μF	10V	M
	C1610	QETN1HM-225Z	E CAP.	2.2μF	50V	M
	C1611-14	NEN51AM-336X	CH AL BP E CAP.	33μF	10V	M
	C1615	QETN1HM-225Z	E CAP.	2.2μF	50V	M
	C1616-17	NDC21HJ-120X	C CAP.	12pF	50V	J
	C1618	NCB21CK-224X	C CAP.	0.22μF	16V	K
	C1619	NCF21HZ-223X	C CAP.	0.022μF	50V	Z
	C1620	NEH71CM-476X	E CAP.	47μF	16V	M
	C1621	NCF21HZ-103X	C CAP.	0.01μF	50V	Z
	C1622-23	NCB21EK-104X	C CAP.	0.1μF	25V	K
	C1624	NEH71HM-225X	E CAP.	2.2μF	50V	M
	C1625	NCB21HK-223X	C CAP.	0.022μF	50V	K
	C1626	NEH71CM-106X	E CAP.	10μF	16V	M
	C1627	NEH71AM-107X	E CAP.	100μF	10V	M
	C1628	NCF21HZ-103X	C CAP.	0.01μF	50V	Z
	C1629-30	NEH71HM-225X	E CAP.	2.2μF	50V	M
	C1631-36	NCB21EK-104X	C CAP.	0.1μF	25V	K
	C1637	NCF21HZ-103X	C CAP.	0.01μF	50V	Z
	C1638	NEH71AM-107X	E CAP.	100μF	10V	M
	C1639	NEH71CM-476X	E CAP.	47μF	16V	M
	C1640	NEH71HM-105X	E CAP.	1μF	50V	M
	C1641	NEH71AM-107X	E CAP.	100μF	10V	M
	C1642	NCF21HZ-103X	C CAP.	0.01μF	50V	Z
	C1643	NEH71HM-225X	E CAP.	2.2μF	50V	M
	C1644	NEH71CM-106X	E CAP.	10μF	16V	M
	C1645	NCB21EK-104X	C CAP.	0.1μF	25V	K
	C1646-47	NCB21CK-474X	C CAP.	0.47μF	16V	K
	C1648-49	NEH71HM-225X	E CAP.	2.2μF	50V	M
	C1651-52	NEH71AM-107X	E CAP.	100μF	10V	M
	C1653	NCF21HZ-103X	C CAP.	0.01μF	50V	Z
	C1654	NEH71CM-476X	E CAP.	47μF	16V	M
	C1655	NCF21HZ-103X	C CAP.	0.01μF	50V	Z
	C1656	NEH71AM-107X	E CAP.	100μF	10V	M
	C1657-58	NCF21HZ-103X	C CAP.	0.01μF	50V	Z
	C1659	NDC21HJ-151X	C CAP.	150pF	50V	J
	C1660	NCB21EK-104X	C CAP.	0.1μF	25V	K
	C1662	NCB21EK-104X	C CAP.	0.1μF	25V	K
	C1663	NEH71AM-107X	E CAP.	100μF	10V	M
	C1664	NCB21EK-104X	C CAP.	0.1μF	25V	K
	C1665-67	NEH71AM-107X	E CAP.	100μF	10V	M
	C1801	NCF21HZ-104X	C CAP.	0.1μF	50V	Z
	C1802	NEH70JM-107X	E CAP.	100μF	6.3V	M
	C1803	NCF21HZ-103X	C CAP.	0.01μF	50V	Z
	C1804	NDC21HJ-271X	C CAP.	270pF	50V	J
	C1806	NCF21HZ-103X	C CAP.	0.01μF	50V	Z
	C1807	NCB21HK-472X	C CAP.	4700pF	50V	K
	C1808	NCF21EZ-104X	C CAP.	0.1μF	25V	Z
	C1809	NEH71HM-105X	E CAP.	1μF	50V	M
	C1810	NEH71CM-476X	E CAP.	47μF	16V	M
	C1811	NCF21HZ-103X	C CAP.	0.01μF	50V	Z
	C1812	NCF21HZ-104X	C CAP.	0.1μF	50V	Z
	C1813	NEH70JM-107X	E CAP.	100μF	6.3V	M
	C1814	NCF21HZ-103X	C CAP.	0.01μF	50V	Z
	C1815	NDC21HJ-271X	C CAP.	270pF	50V	J
	C1816	NCB21HK-102X	C CAP.	1000pF	50V	K

DIODE

⚠	Symbol No.	Part No.	Part Name	Description	Local
	D1101-04	MA111-X	SI.DIODE		
	D1601-02	MA111-X	SI.DIODE		
	D1605	MA111-X	SI.DIODE		
	D1606	MA3030/H/-X	ZENER DIODE		
	D1607-20	MA111-X	SI.DIODE		
	D1801-06	MA3051/M/-X	ZENER DIODE		
	D1807	MA111-X	SI.DIODE		
	D1808-18	MA3051/M/-X	ZENER DIODE		

TRANSISTOR

	Q1101	2SC2412K/QR/-X	SI.TRANSISTOR	
	Q1102	2SA1037AK/QR/-X	SI.TRANSISTOR	
	Q1103-07	2SC2412K/QR/-X	SI.TRANSISTOR	
	Q1601-02	2SC2412K/QR/-X	SI.TRANSISTOR	
	Q1603	2SA1037AK/QR/-X	SI.TRANSISTOR	
	Q1604-05	2SC2412K/QR/-X	SI.TRANSISTOR	
	Q1606	2SA1037AK/QR/-X	SI.TRANSISTOR	
	Q1607-08	2SC2412K/QR/-X	SI.TRANSISTOR	
	Q1609	2SA1037AK/QR/-X	SI.TRANSISTOR	
	Q1610-11	2SC2412K/QR/-X	SI.TRANSISTOR	
	Q1612	2SA1037AK/QR/-X	SI.TRANSISTOR	
	Q1613-14	2SC2412K/QR/-X	SI.TRANSISTOR	
	Q1615	2SA1037AK/QR/-X	SI.TRANSISTOR	
	Q1616-17	2SC2412K/QR/-X	SI.TRANSISTOR	
	Q1618-21	2SA1037AK/QR/-X	SI.TRANSISTOR	
	Q1626	2SA1037AK/QR/-X	SI.TRANSISTOR	
	Q1631-32	DTC124EKA-X	DIGI.TRANSISTOR	
	Q1801-02	2SC2412K/QR/-X	SI.TRANSISTOR	
	Q1803	DTC124EKA-X	DIGI.TRANSISTOR	

IC

	IC1101	M52346SP	I.C(MONO-ANA)	
	IC1102-03	JLC1562BF-X	I.C(DIGI-MOS)	
	IC1104	EPF6016ATC100-3	I.C(M)	
	IC1105	EPC1441-V1700C	I.C(ROM)	(SERVICE)
	IC1106	TLC2932IPW-X	I.C(MONO-ANA)	
	IC1109	BA033FP-X	I.C(MONO-ANA)	
	IC1601	TA1276AN	I.C(MONO-ANA)	
	IC1602	M52055FP-X	I.C(MONO-ANA)	
	IC1603	TC4053BF/N/-XE	I.C(DIGI-MOS)	
	IC1604	M52055FP-X	I.C(MONO-ANA)	
	IC1605	TC4053BF/N/-XE	I.C(DIGI-MOS)	
	IC1606	M52055FP-X	I.C(MONO-ANA)	
	IC1607	TC4053BF/N/-XE	I.C(DIGI-MOS)	
	IC1608	BA09FP-X	I.C(MONO-ANA)	
	IC1801	MB90F553V1700C	I.C(MICRO-COMP)	(SERVICE)
	IC1802	MN1382/Q/-X	I.C(MONO-ANA)	
	IC1803	TC4053BF/N/-XE	I.C(DIGI-MOS)	
	IC1804	M35045-075SP	I.C(DIGI-MOS)	
	IC1805	AT24C16V1700CG	I.C(PROM)	(SERVICE)

OTHERS

K1103	CE42136-A01Y	BEADS CORE
LC1101-04	NQR0313-009X	EMI FILTER
SK1101	CEMS007-008	I.C.SOCKET
SK1801	CEMS007-008	I.C.SOCKET
X1601	CE40749-001Z	CRYSTAL
X1602	CE40668-001Z	CRYSTAL
X1603	CSB503F30	CER.RESONATOR
X1801	CST4.00MGW	CER.RESONATOR

MAIN PW BOARD ASS'Y (FX-2067A)

RESISTOR

⚠	Symbol No.	Part No.	Part Name	Description		Local
	R2401-02	QRE141J-122Y	C R	1.2kΩ	1/4W	J
	R2403-04	QRE141J-272Y	C R	2.7kΩ	1/4W	J
	R2405	QRE141J-102Y	C R	1kΩ	1/4W	J
	R2406	QRE141J-221Y	C R	220Ω	1/4W	J
	R2407	QRE141J-0R0Y	C R	0.0Ω	1/4W	J
	R2408	QRE141J-152Y	C R	1.5kΩ	1/4W	J
	R2409	QRE141J-103Y	C R	10kΩ	1/4W	J
	R2410	QRX029J-1R5	MF R	1.5Ω	2W	J
	R2411	QRE121J-120Y	C R	12Ω	1/2W	J
	R2412	QRE141J-102Y	C R	1kΩ	1/4W	J
	R2419	QRG01GJ-101	OM R	100Ω	1W	J
	R2430	QRE141J-103Y	C R	10kΩ	1/4W	J
	R2501	QRE141J-184Y	C R	180kΩ	1/4W	J
	R2502	QRE141J-122Y	C R	1.2kΩ	1/4W	J
	R2503	QRE141J-224Y	C R	220kΩ	1/4W	J
	R2504	QRA14CF-3302Y	MF R	33kΩ	1/4W	F
⚠	R2505	QRA14CF-2202Y	MF R	22kΩ	1/4W	F
⚠	R2508	QRA14CF-5101Y	MF R	5.1kΩ	1/4W	F
	R2509	QRE141J-103Y	C R	10kΩ	1/4W	J
	R2510	QRE141J-223Y	C R	22kΩ	1/4W	J
	R2511	QRE141J-103Y	C R	10kΩ	1/4W	J
	R2512	QRE141J-101Y	C R	100Ω	1/4W	J
	R2513	QRE141J-100Y	C R	10Ω	1/4W	J
	R2514	QRE141J-473Y	C R	47kΩ	1/4W	J
	R2515	QRE141J-472Y	C R	4.7kΩ	1/4W	J
	R2516	QRG01GJ-470	OM R	47Ω	1W	J
	R2517	QRE141J-102Y	C R	1kΩ	1/4W	J
	R2518	QRX01GJ-R68	MF R	0.68Ω	1W	J
	R2519	QRT039J-1R0	MF R	1.0Ω	3W	J
	R2520	QRG039J-100	OM R	10Ω	3W	J
	R2521	QRE121J-101Y	C R	100Ω	1/2W	J
	R2522-23	QRE141J-470Y	C R	47Ω	1/4W	J
	R2524	QRX029J-2R2	MF R	2.2Ω	2W	J
	R2525	QRE121J-124Y	C R	120kΩ	1/2W	J
	R2526	QRE141J-153Y	C R	15kΩ	1/4W	J
	R2527	QRE141J-102Y	C R	1kΩ	1/4W	J
	R2528	QRE141J-103Y	C R	10kΩ	1/4W	J
	R2529	QRE141J-0R0Y	C R	0.0Ω	1/4W	J
	R2530	QRE121J-121Y	C R	120Ω	1/2W	J
	R2531	QRE121J-221Y	C R	220Ω	1/2W	J
	R2532-33	QRE141J-103Y	C R	10kΩ	1/4W	J
	R2534	QRL029J-101	OM R	100Ω	2W	J
	R2535	QRE141J-152Y	C R	1.5kΩ	1/4W	J
	R2536-38	QRE141J-153Y	C R	15kΩ	1/4W	J
	R2539	QRE141J-471Y	C R	470Ω	1/4W	J
	R2540-41	QRE141J-472Y	C R	4.7kΩ	1/4W	J
	R2543	QRE141J-472Y	C R	4.7kΩ	1/4W	J
	R2545-49	QRE141J-472Y	C R	4.7kΩ	1/4W	J
	R2550	QRM059J-R15	MP R	0.15Ω		J
	R2551	QRE121J-152Y	C R	1.5kΩ	1/2W	J
⚠	R2552	QRA14CF-2203Y	MF R	220kΩ	1/4W	F
	R2553	QRG029J-330	OM R	33Ω	2W	J
	R2555	QRE141J-473Y	C R	47kΩ	1/4W	J
⚠	R2556	QRZ9017-2R2	F R	2.2Ω	1/4W	J
	R2557	QRE121J-330Y	C R	33Ω	1/2W	J
	R2558-59	QRE141J-102Y	C R	1kΩ	1/4W	J
	R2561	QRE141J-123Y	C R	12kΩ	1/4W	J
	R2562	QRE141J-332Y	C R	3.3kΩ	1/4W	J
	R2563	QRE141J-272Y	C R	2.7kΩ	1/4W	J
	R2564	QRE141J-103Y	C R	10kΩ	1/4W	J
	R2601	QRE141J-682Y	C R	6.8kΩ	1/4W	J
	R2602	QRE141J-123Y	C R	12kΩ	1/4W	J
	R2603	QRE141J-393Y	C R	39kΩ	1/4W	J
	R2604	QRE141J-153Y	C R	15kΩ	1/4W	J
	R2605	QRE121J-332Y	C R	3.3kΩ	1/2W	J
	R2606-07	QRE141J-104Y	C R	100kΩ	1/4W	J
	R2608	QRE141J-153Y	C R	15kΩ	1/4W	J
	R2609	QRE141J-823Y	C R	82kΩ	1/4W	J
	R2610	QRE141J-100Y	C R	10Ω	1/4W	J
	R2611-12	QRE141J-104Y	C R	100kΩ	1/4W	J
	R2620	QRE121J-2R2Y	C R	2.2Ω	1/2W	J
	R2621	QRE141J-474Y	C R	470kΩ	1/4W	J

RESISTOR

⚠	Symbol No.	Part No.	Part Name	Description		Local
	R2622	QRE141J-332Y	C R	3.3kΩ	1/4W	J
	R2623	QRE121J-683Y	C R	68kΩ	1/2W	J
	R2624	QRE141J-271Y	C R	270Ω	1/4W	J
	R2801	QRE121J-181Y	C R	180Ω	1/2W	J
	R2802	QRE141J-562Y	C R	5.6kΩ	1/4W	J
	R2803	QRE141J-102Y	C R	1kΩ	1/4W	J
	R2804	QRE141J-103Y	C R	10kΩ	1/4W	J
	R2805	QRE141J-102Y	C R	1kΩ	1/4W	J
	R2807	QRE141J-221Y	C R	220Ω	1/4W	J
	R2808	QRE141J-223Y	C R	22kΩ	1/4W	J
	R2809	QRE141J-100Y	C R	10Ω	1/4W	J
⚠	R2810	QRZ9021-8R2	F R	8.2Ω	1W	J
	R2901	QRG039J-683	OM R	68kΩ	3W	J
	R2902-03	QRM059J-R15	MP R	0.15Ω		J
⚠	R2904	QRK126J-681X	C R	680Ω	1/2W	J
	R2905	QRE141J-332Y	C R	3.3kΩ	1/4W	J
	R2906	QRE141J-472Y	C R	4.7kΩ	1/4W	J
	R2907	QRE141J-332Y	C R	3.3kΩ	1/4W	J
	R2910	QRL029J-683	OM R	68kΩ	2W	J
	R2911	QRE121J-220Y	C R	22Ω	1/2W	J
	R2920	QRE141J-3R3Y	C R	3.3Ω	1/4W	J
	R2921	QRE141J-103Y	C R	10kΩ	1/4W	J
	R2922	QRE141J-392Y	C R	3.9kΩ	1/4W	J
	R2923	QRE141J-102Y	C R	1kΩ	1/4W	J
	R2924	QRE141J-122Y	C R	1.2kΩ	1/4W	J
	R2925-26	QRE141J-5R6Y	C R	5.6Ω	1/4W	J
	R2927	QRE141J-120Y	C R	12Ω	1/4W	J
	R2929-30	QRE141J-1R5Y	C R	1.5Ω	1/4W	J
	R2931	QRE141J-683Y	C R	68kΩ	1/4W	J
	R2932-33	QRE141J-103Y	C R	10kΩ	1/4W	J
	R2934	QRE141J-683Y	C R	68kΩ	1/4W	J
	R2935	QRE141J-223Y	C R	22kΩ	1/4W	J
	R2936-37	QRE141J-103Y	C R	10kΩ	1/4W	J
	R2938	QRE141J-102Y	C R	1kΩ	1/4W	J
	R2939	QRE141J-152Y	C R	1.5kΩ	1/4W	J
	R2940	QRE141J-1R5Y	C R	1.5Ω	1/4W	J
⚠	R2941	QRA14CF-1501Y	MF R	1.5kΩ	1/4W	F
⚠	R2942	QRA14CF-3900Y	MF R	390Ω	1/4W	F
	R2943	QRE141J-680Y	C R	68Ω	1/4W	J
	R2944-45	QRE141J-102Y	C R	1kΩ	1/4W	J
	R2946	QRE141J-1R5Y	C R	1.5Ω	1/4W	J
	R2947	QRE141J-3R3Y	C R	3.3Ω	1/4W	J
	R2948	QRE141J-102Y	C R	1kΩ	1/4W	J
	R2949	QRE121J-152Y	C R	1.5kΩ	1/2W	J
	R2970	QRE141J-821Y	C R	820Ω	1/4W	J
	R2971	QRE141J-472Y	C R	4.7kΩ	1/4W	J
	R2972	QRE141J-153Y	C R	15kΩ	1/4W	J
	R2973	QRE141J-103Y	C R	10kΩ	1/4W	J
	R2974	QRE141J-473Y	C R	47kΩ	1/4W	J
	R2975	QRL039J-562	OM R	5.6kΩ	3W	J

CAPACITOR

Symbol No.	Part No.	Part Name	Description		Local
C2401	QFLC1HJ-103Z	M CAP.	0.01μF	50V	J
C2402	QFV71HJ-334Z	MF CAP.	0.33μF	50V	J
C2403	QCS31HJ-121Z	C CAP.	120pF	50V	J
C2404	QEHR1VM-107Z	E CAP.	100μF	35V	M
C2405	QCB32HK-561Z	C CAP.	560pF	500V	K
C2406	QFLC1HJ-104Z	M CAP.	0.1μF	50V	J
C2407	QFLC1HJ-103Z	M CAP.	0.01μF	50V	J
C2409	QEHQ1EM-228	E CAP.	2200μF	25V	M
C2420	QEHQ1EM-228	E CAP.	2200μF	25V	M
C2501	QEZ0368-227	E CAP.	220μF	160V	
C2502	QFLC2AK-224Z	M CAP.	0.22μF	100V	K
C2503	QCB32HK-151Z	C CAP.	150pF	500V	K
C2504	QEZ0097-106R	E CAP.	10μF	160V	M
C2506	QCB32HK-152Z	C CAP.	1500pF	500V	K
C2507	QFLC1HJ-222Z	M CAP.	2200pF	50V	J
C2508-09	QEHR1CM-107Z	E CAP.	100μF	16V	M
C2510	QFV71HJ-474Z	MF CAP.	0.47μF	50V	J
C2511	QFLC1HJ-122Z	M CAP.	1200pF	50V	J
C2512	QEHR1CM-227Z	E CAP.	220μF	16V	M
C2513-14	QFLC1HJ-472Z	M CAP.	4700pF	50V	J
C2515	QFLC1HJ-392Z	M CAP.	3900pF	50V	J

CAPACITOR

⚠	Symbol No.	Part No.	Part Name	Description		Local
	C2516	QFLC2AK-224Z	M CAP.	0.22μF	100V	K
	C2517-18	QETN1HM-105Z	E CAP.	1μF	50V	M
	C2520	QFZ0196-202	MPP CAP.	2000pF	1.5kVH±3%	
⚠	C2521	QFZ0196-302	MPP CAP.	3000pF	1.5kVH±3%	
	C2522	QFLC1HJ-823Z	M CAP.	0.082μF	50V	J
⚠	C2523	QFZ0196-302	MPP CAP.	3000pF	1.5kVH±3%	
	C2524-25	QFLC2AJ-103Z	M CAP.	0.01μF	100V	J
	C2526	QCS31HJ-471Z	C CAP.	470pF	50V	J
	C2527	QFLC1HJ-472Z	M CAP.	4700pF	50V	J
	C2528	QETN1CM-107Z	E CAP.	100μF	16V	M
	C2550	QETN1HM-475Z	E CAP.	4.7μF	50V	M
	C2551	QFV71HJ-274Z	MF CAP.	0.27μF	50V	J
	C2552	QFZ0196-102	MPP CAP.	1000pF	1.5kVH±3%	
	C2553	QFV71HJ-274Z	MF CAP.	0.27μF	50V	J
	C2554	QEHQ2AM-227	E CAP.	220μF	100V	M
	C2555	QFK62AK-334Z	MM CAP.	0.33μF	100V	K
	C2557	QETN1CM-337Z	E CAP.	330μF	16V	M
	C2558	QENC1HM-105Z	BP E CAP.	1μF	50V	M
	C2559-60	QEHR1HM-105Z	E CAP.	1μF	50V	M
	C2562	QEHR2CM-336Z	E CAP.	33μF	160V	M
	C2570	QEHR1HM-105Z	E CAP.	1μF	50V	M
	C2571	QETN1HM-106Z	E CAP.	10μF	50V	M
	C2601	QENC1HM-225Z	BP E CAP.	2.2μF	50V	M
	C2602	QETN1HM-106Z	E CAP.	10μF	50V	M
	C2603	QCS31HJ-2R0Z	C CAP.	2.0pF	50V	J
	C2604	QEHR2CM-336Z	E CAP.	33μF	160V	M
	C2605	QENC1HM-106Z	BP E CAP.	10μF	50V	M
	C2606	QFLC1HJ-472Z	M CAP.	4700pF	50V	J
	C2607	QENC1HM-225Z	BP E CAP.	2.2μF	50V	M
	C2608	QCS32HJ-820Z	C CAP.	82pF	500V	J
	C2620	QEHR1HM-336Z	E CAP.	33μF	50V	M
	C2801	QETN1CM-228Z	E CAP.	2200μF	16V	M
	C2802	QENC1HM-105Z	BP E CAP.	1μF	50V	M
	C2803	QFLC1HJ-332Z	M CAP.	3300pF	50V	J
	C2804	QETN1HM-225Z	E CAP.	2.2μF	50V	M
	C2805	QETN1HM-106Z	E CAP.	10μF	50V	M
	C2806	QETN1HM-475Z	E CAP.	4.7μF	50V	M
	C2807-08	QETN1HM-336Z	E CAP.	33μF	50V	M
	C2809	QETN1CM-228Z	E CAP.	2200μF	16V	M
	C2810-11	QFV71HJ-104Z	MF CAP.	0.1μF	50V	J
	C2812-13	QETN1CM-228Z	E CAP.	2200μF	16V	M
	C2814	QETN1CM-227Z	E CAP.	220μF	16V	M
⚠	C2901	QFZ9036-104	MF CAP.	0.1μF	AC250V	M
⚠	C2902-05	QCZ9078-472	C CAP.	4700pF	AC250V	M
⚠	C2906	QETM2GM-226	E CAP.	22μF	400V	M
	C2908	QEZ0550-337	E CAP.	330μF	400V	M
	C2909	QCB32HK-472Z	C CAP.	4700pF	500V	K
	C2910	QEHR1EM-107Z	E CAP.	100μF	25V	M
	C2911	QCS31HJ-471Z	C CAP.	470pF	50V	J
⚠	C2912-13	QCZ9075-472	C CAP.	4700pF	AC250V	
⚠	C2914	QFZ9036-104	MF CAP.	0.1μF	AC250V	M
	C2915	QCZ0122-681	C CAP.	680pF	2000V	K
	C2916-19	QCB32HK-271Z	C CAP.	270pF	500V	K
	C2920	QTMN1EM-337Z	E CAP.	330μF	25V	M
	C2921	QEHR1CM-107Z	E CAP.	100μF	16V	M
	C2922	QEHR1CM-337Z	E CAP.	330μF	16V	M
	C2923	QEZ0368-227	E CAP.	220μF	160V	
	C2924	QETN1HM-106Z	E CAP.	10μF	50V	M
	C2925	QETM2DM-337	E CAP.	330μF	200V	M
	C2926	QETM1EM-228	E CAP.	2200μF	25V	M
	C2927	QTMM1EM-228	E CAP.	2200μF	25V	M
	C2928	QETN1HM-106Z	E CAP.	10μF	50V	M
	C2929	QFV71HJ-224Z	MF CAP.	0.22μF	50V	J
	C2930	QETN1HM-106Z	E CAP.	10μF	50V	M
	C2931	QEZ0256-228	E CAP.	2200μF	10V	M
	C2932	QEHR1CM-107Z	E CAP.	100μF	16V	M
	C2933	QEZ0256-128	E CAP.	1200μF	10V	M
	C2934	QETN1CM-107Z	E CAP.	100μF	16V	M
	C2935	QEHR1EM-477Z	E CAP.	470μF	25V	M
	C2936	QETN1CM-228Z	E CAP.	2200μF	16V	M
	C2937	QETN1HM-106Z	E CAP.	10μF	50V	M
	C2939	QEHR1CM-107Z	E CAP.	100μF	16V	M

⚠	Symbol No.	Part No.	Part Name	Description		Local
	C2940	QFLC1HJ-103Z	M CAP.	0.01μF	50V	J
	C2941	QFLC1HJ-102Z	M CAP.	1000pF	50V	J
	C2942	QENC1HM-106Z	BP E CAP.	10μF	50V	M
	C2943	QFLC1HJ-102Z	M CAP.	1000pF	50V	J
	C2944	QTMN1EM-477Z	E CAP.	470μF	25V	M
	C2950	QETN1CM-107Z	E CAP.	100μF	16V	M
	C2952	QETN1CM-108Z	E CAP.	1000μF	16V	M
	C2953	QFLC1HJ-103Z	M CAP.	0.01μF	50V	J
	C2954	QETN1CM-227Z	E CAP.	220μF	16V	M
	C2955	QEHR2CM-335Z	E CAP.	3.3μF	160V	M
	C2958	QEHR1EM-107Z	E CAP.	100μF	25V	M

TRANSFORMER

⚠	Symbol No.	Part No.	Part Name
	T2501	QQR0663-001	DRIVE TRANSF
⚠	T2502	CJ39720-00A	CHOKE TRANSF.
⚠	T2503	QQH0087-001	H.V.TRANSF.
	T2601	CE42710-001	DAF TRANSF
⚠	T2901	QQS0091-001	SWITCH.TRANSF.

COIL

⚠	Symbol No.	Part No.	Part Name	Description	Local
	L2501	QQLZ020-801	CHOKE COIL	800μH	
	L2502-03	QQR0666-001	LINE COIL		
	L2504	QQLZ020-801	CHOKE COIL	800μH	
	L2505	QQL42AK-821Z	COIL	820μH	K
	L2551	QQLZ018-380	HEATER CHOKE	38μH	
	L2553	QQL50AK-221Z	CHOKE COIL	220μH	K
	L2801	QQL244K-4R7Z	COIL	4.7μH	K
⚠	L2901	QQR0676-004	LINE FILTER		
⚠	L2902	QQR0646-006	CHOKE COIL		
	L2904	QQL244K-100Z	COIL	10μH	K
	L2910	QQR0518-001	CHOKE COIL		
	L2911	QQL50AK-100Z	CHOKE COIL	10μH	K

DIODE

⚠	Symbol No.	Part No.	Part Name
	D2402-03	RD33E/B2/-T2	ZENER DIODE
	D2404	1SR35-400A-T2	SI.DIODE
	D2412	1SS133-T2	SI.DIODE
	D2413-14	MTZJ6.8A-T2	ZENER DIODE
	D2501	1SS244-T2	SI.DIODE
	D2502-03	MTZJ12C-T2	ZENER DIODE
	D2504	RL4Z-F1	SI.DIODE
	D2505-07	1SS133-T2	SI.DIODE
⚠	D2508	RGP10J-5025-T3	SI.DIODE
	D2509-10	MTZJ5.6B-T2	ZENER DIODE
	D2511	1SS133-T2	SI.DIODE
	D2512	AG01Z-T2	SI.DIODE
	D2513	1SS244-T2	SI.DIODE
	D2514	AG01Z-T2	SI.DIODE
	D2515	MTZJ5.1B-T2	ZENER DIODE
	D2516	1SS133-T2	SI.DIODE
	D2517	RK14-T3	SI.DIODE
	D2520	RU4DS-F1	SI.DIODE
	D2521	CTU-G3DR	DUMP DIODE
	D2522	RG2A2-LFC4	SI.DIODE
	D2523	1SS244-T2	SI.DIODE
	D2550-51	1SR35-400A-T2	SI.DIODE
⚠	D2552	RGP10J-5025-T3	SI.DIODE
⚠	D2555	RGP10J-5025-T3	SI.DIODE
	D2602	MTZJ5.1B-T2	ZENER DIODE
	D2603	MTZJ27B-T2	ZENER DIODE
	D2801	MTZJ11A-T2	ZENER DIODE
	D2802	1SS133-T2	SI.DIODE
⚠	D2901	RBV-406M	BRIDGE DIODE
	D2902	RU2-LFA1	SI.DIODE
	D2903-04	AG01Z-T2	SI.DIODE
	D2908	RM2C-LFA1	SI.DIODE

⚠	Symbol No.	Part No.	Part Name	Description	Local
	DIODE				
	D2909	AG01-T2	SI.DIODE		
	D2910	SF6L20U	SI.DIODE		
	D2911-12	RG2A-LFC4	SI.DIODE		
	D2913	RU3YX-LFC4	SI.DIODE		
	D2914-15	1SS133-T2	SI.DIODE		
	D2916-17	MTZJ3.3A-T2	ZENER DIODE		
	D2918	1SS133-T2	SI.DIODE		
	D2919-20	MTZJ12C-T2	ZENER DIODE		
	D2921-23	1SS133-T2	SI.DIODE		
	D2950	RK44-LFT4	SI.DIODE		
	D2951	MTZJ5.6B-T2	ZENER DIODE		
	D2952	1SS133-T2	SI.DIODE		
	TRANSISTOR				
	Q2401	2SC3311A/QR/-T	SI.TRANSISTOR		
	Q2501	IRF9630	F.E.T.		
	Q2502	2SC5445	SI.TRANSISTOR		
	Q2503	2SC3311A/QR/-T	SI.TRANSISTOR		
	Q2504	2SA1309A/QR/-T	SI.TRANSISTOR		
	Q2505	2SC3311A/QR/-T	SI.TRANSISTOR		
	Q2506	2SB946/P/	SI.TRANSISTOR		
	Q2507	IRFZ14	F.E.T.		
	Q2508	2SC3311A/QR/-T	SI.TRANSISTOR		
	Q2511	2SC3311A/QR/-T	SI.TRANSISTOR		
	Q2512	DTC114ESA-T	DIGI.TRANSISTOR		
	Q2513	2SA1370/E/	SI.TRANSISTOR		
	Q2514	DTC124ESA-T	DIGI.TRANSISTOR		
	Q2550	2SK2460N-F54	F.E.T.		
	Q2551	2SK2477	F.E.T.		
	Q2601	2SC3311A/QR/-T	SI.TRANSISTOR		
	Q2602	2SD1271A/P/	SI.TRANSISTOR		
	Q2603	2SB861/C/	SI.TRANSISTOR		
	Q2604	2SC1505/MLK/	SI.TRANSISTOR		
	Q2901-02	2SA1309A/QR/-T	SI.TRANSISTOR		
	Q2903-04	2SA1370/E/	SI.TRANSISTOR		
	Q2905	2SC3311A/QR/-T	SI.TRANSISTOR		
	Q2906	2SA1309A/QR/-T	SI.TRANSISTOR		
	Q2910	2SC3311A/QR/-T	SI.TRANSISTOR		
	Q2911	2SC2229/Y/	SI.TRANSISTOR		
	IC				
	IC2401	AN5539-LF	I.C(MONO-ANA)		
	IC2510	JLC1562BN	I.C(DIGI-MOS)		
	IC2601	UPC4556C	I.C.(MONO-ANA)		
	IC2801	AN5265	I.C(MONO-ANA)		
⚠	IC2901	STR-F6658B/F7	I.C(HYBRID)		
⚠	IC2902	QAL0256-001	P.W.B.MODULE		
	IC2903	SE140N	I.C(HYBRID)		
	IC2904	TA79012S	I.C(MONO-ANA)		
	IC2905	BA12T	I.C(MONO-ANA)		
	IC2906	BA05T	I.C(MONO-ANA)		
	IC2907	SI-8050S	I.C(HYBRID)		
	IC2911	PQ30RV21	I.C(MONO-ANA)		

⚠	Symbol No.	Part No.	Part Name	Description	Local
	OTHERS				
		CEMG002-001Z	FUSE CLIP		
⚠	CP2901	QMFZ034-100Z-J1	FUSE		
⚠	CP2904	ICP-N75-Y	I.C.PROTECT		
⚠	F2901	QMF51D2-6R3J1	FUSE		
	K2501	QQR0872-002	FERRITE BEADS		
	K2502	QQR0872-001Y	FERRITE BEADS		
⚠	PC2901	TLP721F(D4-GR)	I.C(PH.COUPLER)		
⚠	PC2902	TLP759F/D4/	I.C(PH.COUPLER)		
⚠	RY2901	QSK0119-001	RELAY		
⚠	RY2902	QSK0119-001	RELAY		
	SG2501	CE42447-242	ARRESTOR		
⚠	TH2901	QAD0137-4R5	P.THERMISISTOR		
	TP2001-02	CM42818-001	TAB		
	W104	QRE121J-152Y	C R	1.5kΩ 1/2W	J
⚠	Z2901	ERZV10V621CS	VARISTOR		

S. CORRECTION PW BOARD ASS'Y (FX-2110A)

⚠	Symbol No.	Part No.	Part Name	Description	Local
	VARIABLE RESISTOR				
	VR2501	QVP0055-502Z	V R	5kΩ X.RAY	
	VR2502	QVP0055-503Z	V R	50kΩ H.VOLTAGE	
	VR2504	QVP0055-103Z	V R	10kΩ CONV_H	
	VR2505	QVP0055-103Z	V R	10kΩ CONV_L	
	RESISTOR				
	R2501-03	QRE141J-102Y	C R	1kΩ 1/4W	J
	R2504	QRE141J-473Y	C R	47kΩ 1/4W	J
⚠	R2505	QRA14CF-9312Y	MF R	9.31kΩ 1/4W	F
	R2506-08	QRE141J-272Y	C R	2.7kΩ 1/4W	J
	R2510	QRE141J-272Y	C R	2.7kΩ 1/4W	J
	R2511	QRE141J-183Y	C R	18kΩ 1/4W	J
	R2512	QRL039J-561	OM R	560Ω 3W	J
⚠	R2513	QRA14CF-2102Y	MF R	21kΩ 1/4W	F
	R2514	QRL029J-101	OM R	100Ω 2W	J
	R2515	QRL029J-470	OM R	47Ω 2W	J
	R2516	QRE141J-472Y	C R	4.7kΩ 1/4W	J
	R2517	QRE141J-473Y	C R	47kΩ 1/4W	J
	R2518	QRE141J-273Y	C R	27kΩ 1/4W	J
	R2519	QRE141J-102Y	C R	1kΩ 1/4W	J
	R2520	QRE141J-182Y	C R	1.8kΩ 1/4W	J
	R2521	QRE141J-682Y	C R	6.8kΩ 1/4W	J
	R2524	QRG01GJ-560	OM R	56Ω 1W	J
	R2525	QRE141J-681Y	C R	680Ω 1/4W	J
	R2526-29	QRE141J-821Y	C R	820Ω 1/4W	J
	R2530-31	QRG01GJ-391	OM R	390Ω 1W	J
	CAPACITOR				
	C2501	QFZ0197-335	MPP CAP.	3.3μF 250V	J
	C2502	QFZ0197-754	MPP CAP.	0.75μF 250V	J
	C2504	QFZ0197-754	MPP CAP.	0.75μF 250V	J
	C2505	QFZ0197-564	MPP CAP.	0.56μF 250V	J
	C2506-07	QFLC1HJ-473Z	M CAP.	0.047μF 50V	J
	C2508	QFLC1HJ-153Z	M CAP.	0.015μF 50V	J
	C2510	QCB32HK-152Z	C CAP.	1500pF 500V	K
	C2511-12	QETN1CM-107Z	E CAP.	100μF 16V	M
	C2513-14	QENC1CM-476Z	BP E CAP.	47μF 16V	M
	C2515	QFLC1HJ-104Z	M CAP.	0.1μF 50V	J
	C2516-17	QENC1CM-476Z	BP E CAP.	47μF 16V	M
	C2518-19	QFLC1HJ-104Z	M CAP.	0.1μF 50V	J

COIL

⚠	Symbol No.	Part No.	Part Name	Description	Local
	L2501	QQR0915-005	HOR.LINEAR COIL		
	L2502	QQR0664-002	CHOKE COIL		

DIODE

⚠	Symbol No.	Part No.	Part Name	Description	Local
	D2501	1SS133-T2	SI.DIODE		
	D2502	1SS244-T2	SI.DIODE		
	D2520-25	1SS133-T2	SI.DIODE		

TRANSISTOR

⚠	Symbol No.	Part No.	Part Name	Description	Local
	Q2501-04	IRF640	F.E.T.		
	Q2507-09	2SC3311A/QR/-T	SI.TRANSISTOR		
	Q2511-12	2SC3311A/QR/-T	SI.TRANSISTOR		

IC

⚠	Symbol No.	Part No.	Part Name	Description	Local
	IC2501	LA6515	I.C(MONO-ANA)		
	IC2502	BA15218N	I.C(MONO-ANA)		

OTHERS

⚠	Symbol No.	Part No.	Part Name	Description	Local
⚠	RY2501	CESK028-001	RELAY		
	S2501	QSL4A13-C03Z	LEVER SWITCH		
	TP-G	CM42818-001	TAB		
	TP-XR	CM42818-001	TAB		

CRT SOCKET PW BOARD ASS'Y (FX-3061A)

RESISTOR

⚠	Symbol No.	Part No.	Part Name	Description	Local
	R3001	NRSA02J-103X	MG R	10kΩ 1/10W	J
	R3002	NRSA02J-332X	MG R	3.3kΩ 1/10W	J
	R3003	NRSA02J-103X	MG R	10kΩ 1/10W	J
	R3004	NRSA02J-680X	MG R	68Ω 1/10W	J
	R3005	QRL029J-152	OM R	1.5kΩ 2W	J
	R3006	QRL029J-182	OM R	1.8kΩ 2W	J
	R3007	QRK126J-474X	C R	470kΩ 1/2W	J
⚠	R3008	QRZ9017-471	F R	470Ω 1/4W	J
	R3009	QRK126J-223X	C R	22kΩ 1/2W	J
	R3011	NRSA02J-103X	MG R	10kΩ 1/10W	J
	R3012	QRK126J-152X	C R	1.5kΩ 1/2W	J
⚠	R3013-14	QRZ9011-100	F R	10Ω 1/2W	J
	R3015	QRC121K-473Z	COMP. R	47kΩ 1/2W	K
	R3017	NRSA02J-273X	MG R	27kΩ 1/10W	J
	R3018	NRSA02J-104X	MG R	100kΩ 1/10W	J
	R3019	NRSA02J-0R0X	MG R	0.0Ω 1/10W	J
⚠	R3021	QRK126J-102X	C R	1kΩ 1/2W	J
	R3022	NRSA02J-122X	MG R	1.2kΩ 1/10W	J
	R3023	NRSA02J-103X	MG R	10kΩ 1/10W	J
	R3024	NRSA02J-332X	MG R	3.3kΩ 1/10W	J
	R3025	NRSA02J-103X	MG R	10kΩ 1/10W	J
	R3026	NRSA02J-152X	MG R	1.5kΩ 1/10W	J
	R3027	NRSA02J-153X	MG R	15kΩ 1/10W	J
	R3028	NRSA02J-152X	MG R	1.5kΩ 1/10W	J
	R3029	QRK126J-473X	C R	47kΩ 1/2W	J
	R3101	NRSA02J-101X	MG R	100Ω 1/10W	J
⚠	R3102	QRK126J-331X	C R	330Ω 1/2W	J
	R3103	NRSA02J-680X	MG R	68Ω 1/10W	J
	R3104	NRSA02J-101X	MG R	100Ω 1/10W	J
	R3105	QRC121K-101Z	COMP. R	100Ω 1/2W	K
	R3106	NRSA02J-0R0X	MG R	0.0Ω 1/10W	J
	R3108	NRSA02J-560X	MG R	56Ω 1/10W	J
	R3109	QRL039J-472	OM R	4.7kΩ 3W	J
⚠	R3110	QRZ9017-471	F R	470Ω 1/4W	J
	R3201	NRSA02J-101X	MG R	100Ω 1/10W	J
⚠	R3202	QRK126J-331X	C R	330Ω 1/2W	J
	R3203	NRSA02J-270X	MG R	27Ω 1/10W	J
	R3204	NRSA02J-101X	MG R	100Ω 1/10W	J
	R3205	QRC121K-101Z	COMP. R	100Ω 1/2W	K
	R3206	NRSA02J-0R0X	MG R	0.0Ω 1/10W	J
	R3208	NRSA02J-560X	MG R	56Ω 1/10W	J
	R3209	QRL039J-472	OM R	4.7kΩ 3W	J
⚠	R3210	QRZ9017-471	F R	470Ω 1/4W	J
	R3301	NRSA02J-101X	MG R	100Ω 1/10W	J
⚠	R3302	QRK126J-331X	C R	330Ω 1/2W	J
	R3303-04	NRSA02J-101X	MG R	100Ω 1/10W	J
	R3305	QRC121K-101Z	COMP. R	100Ω 1/2W	K
	R3306	NRSA02J-0R0X	MG R	0.0Ω 1/10W	J
	R3308	NRSA02J-560X	MG R	56Ω 1/10W	J
	R3309	QRL039J-472	OM R	4.7kΩ 3W	J
⚠	R3310	QRZ9017-471	F R	470Ω 1/4W	J

CAPACITOR

⚠	Symbol No.	Part No.	Part Name	Description	Local
	C3001	QEHQ1EM-228	E CAP.	2200μF 25V	M
	C3002	NCB21HK-103X	C CAP.	0.01μF 50V	K
	C3003	QEHR2CM-336Z	E CAP.	33μF 160V	M
	C3004	NDC21HJ-471X	C CAP.	470pF 50V	J
	C3005	QFP32GK-563	PP CAP.	0.056μF 400V	K
	C3006	NCB21HK-103X	C CAP.	0.01μF 50V	K
	C3007	QFM72DJ-152Z	M CAP.	1500pF 200V	J
	C3008	QCZ0324-102	C CAP.	1000pF 3000V	P
	C3009	QETN1CM-107Z	E CAP.	100μF 16V	M
	C3010	QETM2EM-336	E CAP.	33μF 250V	M
	C3011	QEHR2CM-336Z	E CAP.	33μF 160V	M
	C3012	QETN2EM-106Z	E CAP.	10μF 250V	M
	C3013	QFV71HJ-154Z	MF CAP.	0.15μF 50V	J
	C3101	NDC21HJ-820X	C CAP.	82pF 50V	J
	C3201	NDC21HJ-101X	C CAP.	100pF 50V	J
	C3301	NDC21HJ-181X	C CAP.	180pF 50V	J

COIL

⚠	Symbol No.	Part No.	Part Name	Description	Local
	L3001	QQL01BK-102Z	COIL	1mH	K
	L3002	QQL50AK-330Z	CHOKE COIL	33μH	K

DIODE

	D3001-02	MA111-X	SI.DIODE
	D3003	1SS82-T2	SI.DIODE
	D3004-05	1SR124-400A-T2	SI.DIODE
	D3006	MA111-X	SI.DIODE
	D3007	MA3051/M/-X	ZENER DIODE
	D3008	RU2-T3	SI.DIODE
	D3009	1SS82-T2	SI.DIODE
	D3010-11	MA111-X	SI.DIODE
	D3013	MA111-X	SI.DIODE
	D3014	MA3110/M/-X	ZENER DIODE
	D3015-17	MA111-X	SI.DIODE
	D3101	MA111-X	SI.DIODE
	D3103-05	MA111-X	SI.DIODE
	D3201	MA111-X	SI.DIODE
	D3203-05	MA111-X	SI.DIODE
	D3301	MA111-X	SI.DIODE
	D3303-05	MA111-X	SI.DIODE

TRANSISTOR

	Q3001	2SC1505/MLK/	SI.TRANSISTOR
	Q3002	2SA965/OY/	SI.TRANSISTOR
	Q3003	2SC2235/OY/	SI.TRANSISTOR
	Q3004	2SC2229/Y/	SI.TRANSISTOR
	Q3007	2SC2412K/QR/-X	SI.TRANSISTOR
	Q3008	2SA1037AK/QR/-X	SI.TRANSISTOR
	Q3009	2SC2412K/QR/-X	SI.TRANSISTOR
	Q3101	2SA1321	SI.TRANSISTOR
	Q3201	2SA1321	SI.TRANSISTOR
	Q3301	2SA1321	SI.TRANSISTOR

IC

	IC3001	VPS13S	I.C(M)

OTHERS

	SG3001	CE42447-242	ARRESTOR
	SG3101	QAF0006-201	ARRESTER
	SG3201	QAF0006-201	ARRESTER
	SG3301	QAF0006-201	ARRESTER
⚠	SK3001	CE42670-002	C.R.T.SOCKET
	TP-47B	CM42818-001	TAB
	TP-47G	CM42818-001	TAB
	TP-47R	CM42818-001	TAB
	TP-GND	CM42818-001	TAB

FRONT CONTROL PW BOARD ASS'Y (FX-4065A)

RESISTOR

⚠	Symbol No.	Part No.	Part Name	Description		Local
	R4101	NRSA02J-391X	MG R	390Ω	1/10W	J
	R4102	NRSA02J-470X	MG R	47Ω	1/10W	J
	R4103	NRSA02J-391X	MG R	390Ω	1/10W	J
	R4104	NRSA02J-103X	MG R	10kΩ	1/10W	J
	R4105	NRSA02J-391X	MG R	390Ω	1/10W	J
	R4106	NRSA02J-103X	MG R	10kΩ	1/10W	J
	R4107	NRSA02J-391X	MG R	390Ω	1/10W	J
	R4108	NRSA02J-103X	MG R	10kΩ	1/10W	J
	R4109	NRSA02J-391X	MG R	390Ω	1/10W	J
	R4110	NRSA02J-103X	MG R	10kΩ	1/10W	J
	R4111	NRSA02J-391X	MG R	390Ω	1/10W	J
	R4112	NRSA02J-103X	MG R	10kΩ	1/10W	J
	R4113	NRSA02J-391X	MG R	390Ω	1/10W	J
	R4114	NRSA02J-103X	MG R	10kΩ	1/10W	J
	R4119	NRSA02J-391X	MG R	390Ω	1/10W	J
	R4120	NRSA02J-103X	MG R	10kΩ	1/10W	J
	R4121	NRSA02J-391X	MG R	390Ω	1/10W	J
	R4122	NRSA02J-103X	MG R	10kΩ	1/10W	J
	R4123	NRSA02J-391X	MG R	390Ω	1/10W	J
	R4124	NRSA02J-103X	MG R	10kΩ	1/10W	J
	R4125	NRSA02J-391X	MG R	390Ω	1/10W	J
	R4126	NRSA02J-103X	MG R	10kΩ	1/10W	J
	R4127	NRSA02J-391X	MG R	390Ω	1/10W	J
	R4128	NRSA02J-103X	MG R	10kΩ	1/10W	J
	R4129	NRSA02J-391X	MG R	390Ω	1/10W	J
	R4130	NRSA02J-103X	MG R	10kΩ	1/10W	J
	R4131	NRSA02J-391X	MG R	390Ω	1/10W	J
	R4132-42	NRSA02J-103X	MG R	10kΩ	1/10W	J
	R4150	NRSA02J-123X	MG R	12kΩ	1/10W	J
	R4151	NRSA02J-102X	MG R	1kΩ	1/10W	J
	R4152	NRSA02J-102X	MG R	1kΩ	1/10W	J

CAPACITOR

	C4101	NEH71CM-476X	E CAP.	47μF	16V	M
	C4102	NCF21HZ-103X	C CAP.	0.01μF	50V	Z

DIODE

	D4101-19	MA111-X	SI.DIODE
	D4120	GL3ED8	L.E.D.

TRANSISTOR

	Q4101	2SA1037AK/QR/-X	SI.TRANSISTOR
	Q4102-05	2SC2412K/QR/-X	SI.TRANSISTOR
	Q4106-11	2SA1037AK/QR/-X	SI.TRANSISTOR
	Q4112-14	2SC2412K/QR/-X	SI.TRANSISTOR
	Q4120	2SC2412K/QR/-X	SI.TRANSISTOR

IC

	IC4101	JLC1562BF-X	I.C(DIGI-MOS)

OTHERS

		LC40656-001A	L.E.D.SPACER
	S4101	QSW0619-003Z	PUSH SWITCH	POWER
	S4102	QSW0889-001	TACT SWITCH	COLOR OFF
	S4103	QSW0889-001	TACT SWITCH	PULSE CROSS
	S4104	QSW0889-001	TACT SWITCH	UNDER SCAN
	S4105	QSW0889-001	TACT SWITCH	BLUE CHECK
	S4106	QSW0889-001	TACT SWITCH	INPUT F
	S4107	QSW0889-001	TACT SWITCH	INPUT E

OTHERS

⚠ Symbol No.	Part No.	Part Name	Description	Local
S4108	QSW0889-001	TACT SWITCH	NPUT D	
S4109	QSW0889-001	TACT SWITCH	INPUT C	
S4110	QSW0889-001	TACT SWITCH	INPUT B	
S4111	QSW0889-001	TACT SWITCH	INPUT A	
S4112	QSW0619-003Z	PUSH SWITCH	VOLUME-	
S4113	QSW0889-001	TACT SWITCH	DEGAUSS	
S4114	QSW0889-001	TACT SWITCH	AREA MARKER	
S4115	QSW0889-001	TACT SWITCH	ASPECT	
S4116	QSW0619-003Z	PUSH SWITCH	VOLUME+	
S4117	QSW0619-003Z	PUSH SWITCH	DOWN	
S4118	QSW0619-003Z	PUSH SWITCH	UP	
S4119	QSW0619-003Z	PUSH SWITCH	MENU	

FRONT VR PW BOARD ASS'Y (FX-5022A)

VARIABLE RESISTOR

⚠ Symbol No.	Part No.	Part Name	Description	Local
VR5101	QVQ0286-B14	V R	CONTRAST	
VR5102	QVQ0286-B14	V R	BRIGHT	
VR5103	QVQ0286-B14	V R	CHROMA	
VR5104	QVQ0286-B14	V R	PHASE	

RESISTOR

⚠ Symbol No.	Part No.	Part Name	Description	Local
R5101-04	NRSA02J-333X	MG R	33kΩ 1/10W J	

CAPACITOR

⚠ Symbol No.	Part No.	Part Name	Description	Local
C5101	QETN1CM-107Z	E CAP.	100μF 16V M	
C5102	NCF21HZ-103X	C CAP.	0.01μF 50V Z	

DIODE

⚠ Symbol No.	Part No.	Part Name	Description	Local
D5101-04	MA3056/M/-X	ZENER DIODE		

MOTHER PW BOARD ASS'Y (FX-6069B)

RESISTOR

⚠ Symbol No.	Part No.	Part Name	Description	Local
R6101-09	NRSA02J-223X	MG R	22kΩ 1/10W J	
R6113	NRSA02J-103X	MG R	10kΩ 1/10W J	
R6117	NRSA02J-103X	MG R	10kΩ 1/10W J	
R6118	NRSA02J-183X	MG R	18kΩ 1/10W J	
R6119	NRSA02J-333X	MG R	33kΩ 1/10W J	
R6120	NRSA02J-102X	MG R	1kΩ 1/10W J	
R6121	NRSA02J-183X	MG R	18kΩ 1/10W J	
R6122	NRSA02J-333X	MG R	33kΩ 1/10W J	
R6123	NRSA02J-332X	MG R	3.3kΩ 1/10W J	
R6124	NRSA02J-183X	MG R	18kΩ 1/10W J	
R6125	NRSA02J-333X	MG R	33kΩ 1/10W J	
R6126	NRSA02J-332X	MG R	3.3kΩ 1/10W J	
R6133	NRSA02J-103X	MG R	10kΩ 1/10W J	
R6150-67	NRSA02J-103X	MG R	10kΩ 1/10W J	
R6168	NRSA02J-0R0X	MG R	0.0Ω 1/10W J	

CAPACITOR

⚠ Symbol No.	Part No.	Part Name	Description	Local
C6101	QETN1CM-107Z	E CAP.	100μF 16V M	
C6102	NCF21HZ-103X	C CAP.	0.01μF 50V Z	
C6103	QETN1CM-107Z	E CAP.	100μF 16V M	
C6104	NCF21HZ-103X	C CAP.	0.01μF 50V Z	
C6105-18	QETN1EM-476Z	E CAP.	47μF 25V M	
C6119	QETN1CM-107Z	E CAP.	100μF 16V M	
C6120	NCF21HZ-103X	C CAP.	0.01μF 50V Z	
C6121-26	QETN1HM-106Z	E CAP.	10μF 50V M	
C6127	QETN1EM-476Z	E CAP.	47μF 25V M	
C6128-33	QETN1HM-106Z	E CAP.	10μF 50V M	
C6137	QETN1CM-107Z	E CAP.	100μF 16V M	
C6138	NCF21HZ-103X	C CAP.	0.01μF 50V Z	
C6139-43	QETN1EM-476Z	E CAP.	47μF 25V M	
C6145-47	NDC21HJ-100X	C CAP.	10pF 50V J	
C6201	QETN1EM-476Z	E CAP.	47μF 25V M	
C6202	NCF21HZ-104X	C CAP.	0.1μF 50V Z	
C6203	QEHQ1EM-228	E CAP.	2200μF 25V M	
C6204	QETN1EM-476Z	E CAP.	47μF 25V M	
C6205	NCF21HZ-104X	C CAP.	0.1μF 50V Z	
C6206	QETN1CM-107Z	E CAP.	100μF 16V M	
C6207-08	NCF21HZ-224X	C CAP.	0.22μF 50V Z	

TRANSISTOR

⚠ Symbol No.	Part No.	Part Name	Description	Local
Q6101-03	2SC2412K/QR/-X	SI.TRANSISTOR		

IC

⚠ Symbol No.	Part No.	Part Name	Description	Local
IC6101-02	TC4052BF/N/-XE	I.C(DIGI-MOS)		
IC6103	JLC1562BF-X	I.C(DIGI-MOS)		
IC6104-05	M52055FP-X	I.C(MONO-ANA)		
IC6106-09	NJM2234M-XE	I.C(MONO-AMA)		
IC6110	TC4052BF/N/-XE	I.C(DIGI-MOS)		
IC6111	M52055FP-X	I.C(MONO-ANA)		
IC6201	BA12FP-X	I.C(MONO-ANA)		
IC6202	BA05FP-X	I.C(MONO-ANA)		

TALLY PW BOARD ASS'Y (FX-7011A)

⚠	Symbol No.	Part No.	Part Name	Description	Local
	RESISTOR				
	R7101-05	NRSA02J-181X	MG R	180Ω 1/10W	J
	DIODE				
	D7101-10	SML-211DT-X	L.E.D.		

REMOTE PW BOARD ASS'Y (FX-8016A)

⚠	Symbol No.	Part No.	Part Name	Description	Local
	RESISTOR				
	R8101-08	NRSA02J-151X	MG R	150Ω 1/10W	J
	R8109-12	NRZ0040-101X	NET. R	100Ω	
	R8123-40	NRSA02J-103X	MG R	10kΩ 1/10W	J
	CAPACITOR				
	C8101-02	NEH71HM-105X	E CAP.	1μF 50V	M
	C8103	NEH70JM-107X	E CAP.	100μF 6.3V	M
	C8104	NCF21HZ-103X	C CAP.	0.01μF 50V	Z
	C8105-06	NEH71HM-105X	E CAP.	1μF 50V	M
	DIODE				
	D8101-16	MA3120/M/-X	ZENER DIODE		
	D8117-44	MA111-X	SI.DIODE		
	IC				
	IC8101	ADM237LJR	I.C(HYBRID)		
	IC8102-03	JLC1562BF-X	I.C(DIGI-MOS)		

SUB DEF PW BOARD ASS'Y (FX-M017A)

⚠	Symbol No.	Part No.	Part Name	Description	Local
	OTHERS				
		FX-M017A	SUB DEF MODULE PWB		

HV CONTROL PW BOARD ASS'Y (FX-M018A)

⚠	Symbol No.	Part No.	Part Name	Description	Local
	OTHERS				
		FX-M018A	HV CONTROL MODULE PWB		

⚠	Symbol No.	Part No.	Part Name	Description	Local

PACKING

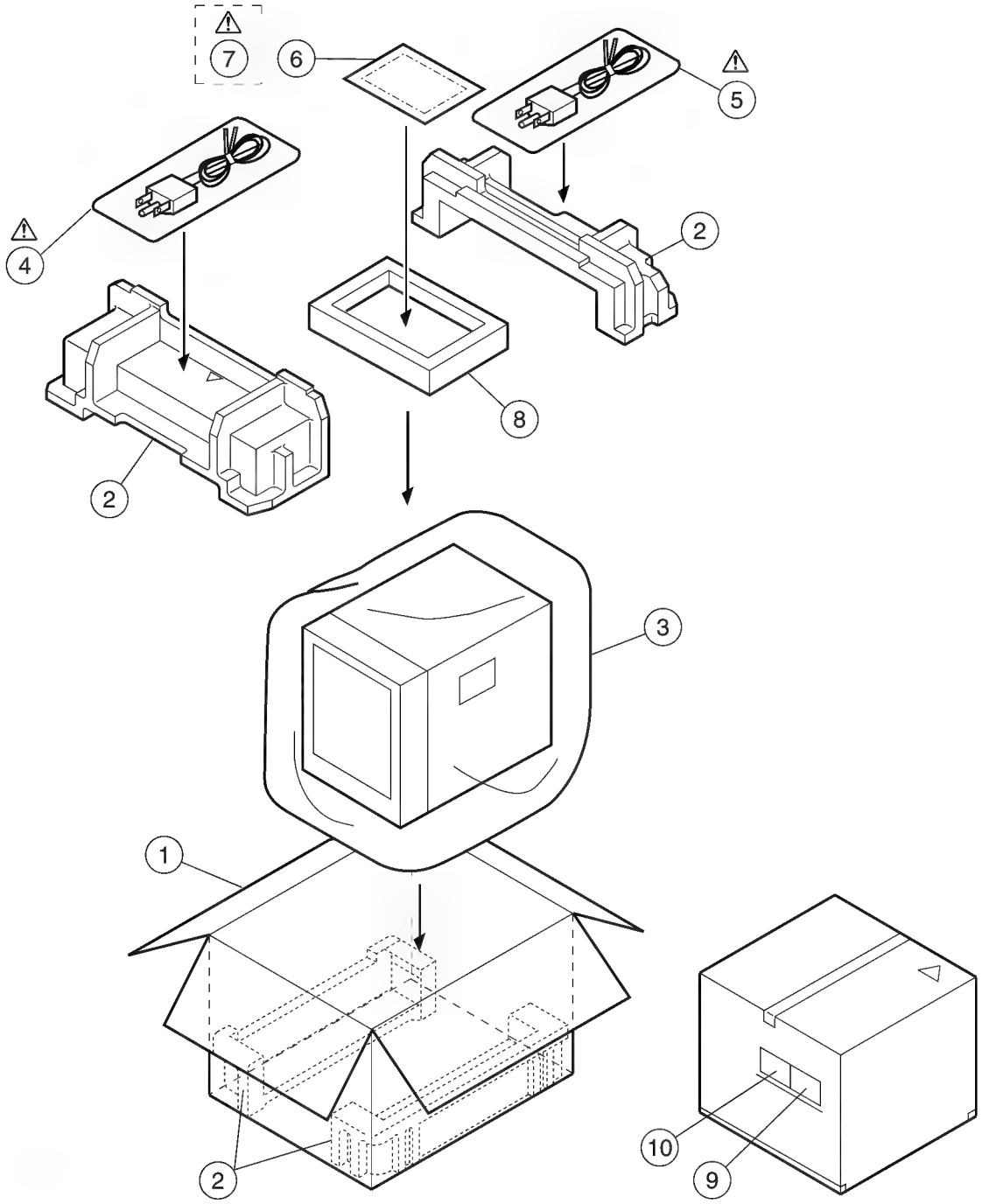

PACKING PARTS LIST

⚠	Ref.No.	Part No.	Part Name	Description	Local
	1	LC10275-050A	PACKING CAE		
	2	LC10873-001B	PACKING CUSHION	4pcs in 1set	
	3	CP30974-004	POLY BAG		
⚠	4	QMPL040-200-JC	POWER CORD		
⚠	5	QMPP010-200-JC	POWER CORD		
	6	QPA02503505P	POLY BAG		
⚠	7	LCT1002-001A	INST. BOOK		
	8	LC20758-001A	WIDE MASK PANEL		
	9	CM47385-00A	POS/SERIAL LABEL		
	10	CM21428-00A	CARD (PRINT SPEC)		

EXPLODED VIEW PARTS LIST/EXPLODED VIEW [OPTION]

[IF-C01PNG]

⚠ Ref.No.	Part No.	Part Name	Description	Local
1	LC31464-001A-C	SLOT PANEL		
2	QYSBSGG3008Z	TAPPING SCREW	(× 6)	
3	QYSDSF3010M	TAPPING SCREW	(× 5)	
4	LC31465-001A-C	SLOT SHIELD		

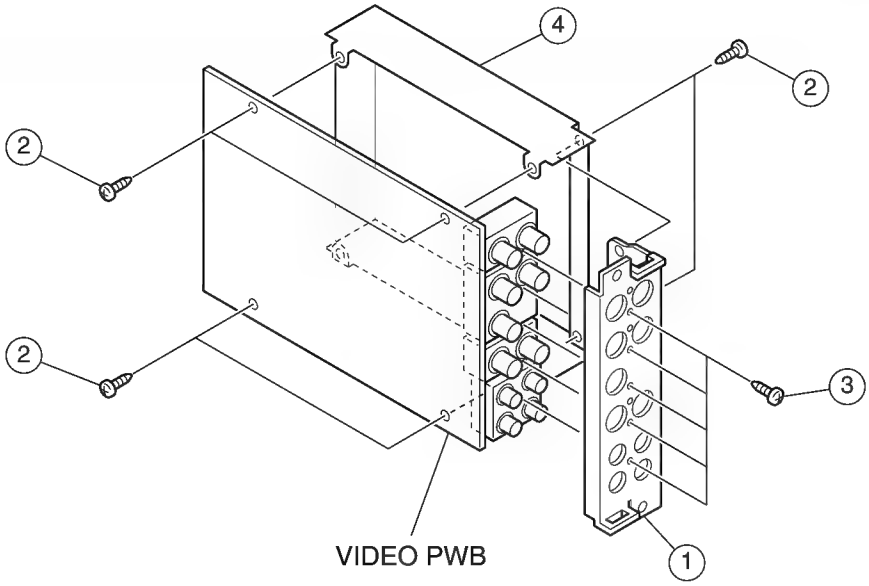

[IF-C01COMG]

⚠ Ref.No.	Part No.	Part Name	Description	Local
1	LC31464-002A-C	SLOT PANEL		
2	QYSBSGG3008Z	TAPPING SCREW	(× 6)	
3	QYSBSF3010M	TAPPING SCREW	(× 6)	
4	LC31465-001A-C	SLOT SHIELD		

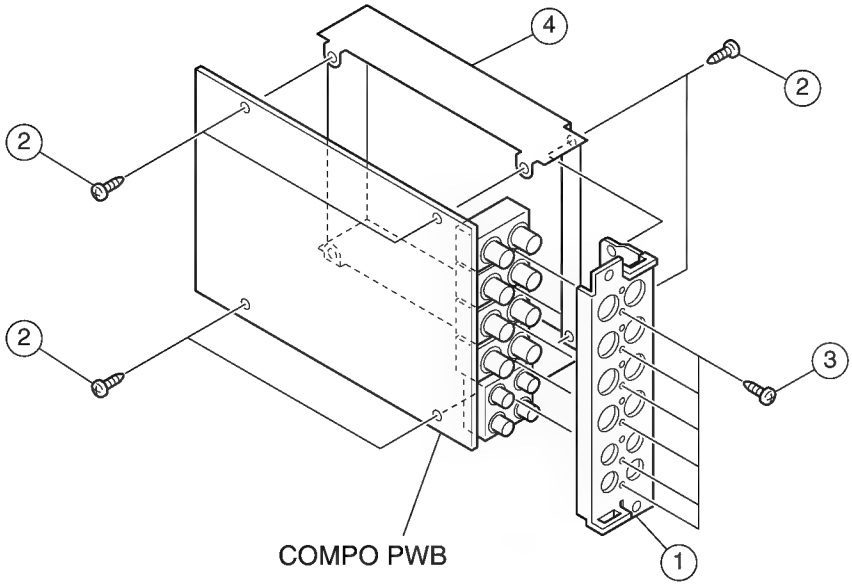

PRINTED WIRING BOARD PARTS LIST [OPTION]

VIDEO PW BOARD ASS'Y (FX-M015A) [IF-C01PNG]

VARIABLE RESISTOR

⚠ Symbol No.	Part No.	Part Name	Description	Local
VR0101	QVP0053-201Z	V R	200Ω	VBS AMP
VR0102	QVP0053-201Z	V R	200Ω	Y AMP
VR0301	QVP0053-202Z	V R	2kΩ	LIS GAIN
VR0302	QVP0053-103Z	V R	10kΩ	TINT
VR0303	QVP0053-103Z	V R	10kΩ	NTSC COLOR
VR0304	QVP0053-201Z	V R	200Ω	Pr AMP
VR0305	QVP0053-103Z	V R	10kΩ	PAL COLOR

RESISTOR

⚠ Symbol No.	Part No.	Part Name	Description	Local
R0101-02	QRE141J-750Y	C R	75Ω 1/4W	J
R0103	QRE141J-101Y	C R	100Ω 1/4W	J
R0104-05	QRE141J-393Y	C R	39kΩ 1/4W	J
R0106	QRE141J-562Y	C R	5.6kΩ 1/4W	J
R0107	QRE141J-101Y	C R	100Ω 1/4W	J
R0108	QRE141J-103Y	C R	10kΩ 1/4W	J
R0109	QRE141J-101Y	C R	100Ω 1/4W	J
R0110-11	QRE141J-393Y	C R	39kΩ 1/4W	J
R0112	QRE141J-562Y	C R	5.6kΩ 1/4W	J
R0113	QRE141J-101Y	C R	100Ω 1/4W	J
R0114	QRE141J-393Y	C R	39kΩ 1/4W	J
R0115	QRE141J-153Y	C R	15kΩ 1/4W	J
R0116	QRE141J-391Y	C R	390Ω 1/4W	J
R0117	QRE141J-221Y	C R	220Ω 1/4W	J
R0118	QRE141J-101Y	C R	100Ω 1/4W	J
R0119	QRE141J-271Y	C R	270Ω 1/4W	J
R0120	QRE141J-391Y	C R	390Ω 1/4W	J
R0121	QRE141J-182Y	C R	1.8kΩ 1/4W	J
R0122	QRE141J-101Y	C R	100Ω 1/4W	J
R0123	QRE141J-152Y	C R	1.5kΩ 1/4W	J
R0124	QRE141J-101Y	C R	100Ω 1/4W	J
R0125	QRE141J-681Y	C R	680Ω 1/4W	J
R0130-31	QRE141J-750Y	C R	75Ω 1/4W	J
R0132	QRE141J-101Y	C R	100Ω 1/4W	J
R0133	QRE141J-393Y	C R	39kΩ 1/4W	J
R0134	QRE141J-183Y	C R	18kΩ 1/4W	J
R0135	QRE141J-562Y	C R	5.6kΩ 1/4W	J
R0136	QRE141J-101Y	C R	100Ω 1/4W	J
R0137	QRE141J-391Y	C R	390Ω 1/4W	J
R0138	QRE141J-221Y	C R	220Ω 1/4W	J
R0139	QRE141J-101Y	C R	100Ω 1/4W	J
R0140	QRE141J-271Y	C R	270Ω 1/4W	J
R0141	QRE141J-391Y	C R	390Ω 1/4W	J
R0142	QRE141J-182Y	C R	1.8kΩ 1/4W	J
R0143	QRE141J-101Y	C R	100Ω 1/4W	J
R0144	QRE141J-393Y	C R	39kΩ 1/4W	J
R0145	QRE141J-183Y	C R	18kΩ 1/4W	J
R0146	QRE141J-562Y	C R	5.6kΩ 1/4W	J
R0147	QRE141J-101Y	C R	100Ω 1/4W	J
R0148	QRE141J-391Y	C R	390Ω 1/4W	J
R0149	QRE141J-221Y	C R	220Ω 1/4W	J
R0151	QRE141J-271Y	C R	270Ω 1/4W	J
R0152	QRE141J-391Y	C R	390Ω 1/4W	J
R0153	QRE141J-182Y	C R	1.8kΩ 1/4W	J
R0154	QRE141J-223Y	C R	22kΩ 1/4W	J
R0155	QRE141J-273Y	C R	27kΩ 1/4W	J
R0161	QRE141J-102Y	C R	1kΩ 1/4W	J
R0162	QRE141J-563Y	C R	56kΩ 1/4W	J
R0163	QRE141J-683Y	C R	68kΩ 1/4W	J
R0164	QRE141J-682Y	C R	6.8kΩ 1/4W	J
R0166	QRE141J-102Y	C R	1kΩ 1/4W	J
R0167	QRE141J-563Y	C R	56kΩ 1/4W	J
R0168	QRE141J-683Y	C R	68kΩ 1/4W	J
R0169	QRE141J-682Y	C R	6.8kΩ 1/4W	J
R0170	QRE141J-102Y	C R	1kΩ 1/4W	J
R0171	QRE141J-0R0Y	C R	0.0Ω 1/4W	J
R0172	QRE141J-682Y	C R	6.8kΩ 1/4W	J
R0173	QRE141J-101Y	C R	100Ω 1/4W	J
R0174-75	QRE141J-393Y	C R	39kΩ 1/4W	J
R0176	QRE141J-562Y	C R	5.6kΩ 1/4W	J
R0177	QRE141J-101Y	C R	100Ω 1/4W	J
R0178-79	QRE141J-151Y	C R	150Ω 1/4W	J
R0210	QRE141J-331Y	C R	330Ω 1/4W	J
R0211	QRE141J-101Y	C R	100Ω 1/4W	J
R0212	QRE141J-392Y	C R	3.9kΩ 1/4W	J
R0214	QRE141J-271Y	C R	270Ω 1/4W	J
R0216	QRE141J-273Y	C R	27kΩ 1/4W	J
R0220	QRE141J-103Y	C R	10kΩ 1/4W	J
R0221	QRE141J-393Y	C R	39kΩ 1/4W	J
R0222	QRE141J-223Y	C R	22kΩ 1/4W	J
R0224-25	QRE141J-821Y	C R	820Ω 1/4W	J
R0226	QRE141J-102Y	C R	1kΩ 1/4W	J
R0228	QRE141J-0R0Y	C R	0.0Ω 1/4W	J
R0229-30	QRE141J-102Y	C R	1kΩ 1/4W	J
R0231	QRE141J-391Y	C R	390Ω 1/4W	J
R0232-33	QRE141J-562Y	C R	5.6kΩ 1/4W	J
R0234	QRE141J-272Y	C R	2.7kΩ 1/4W	J
R0235-36	QRE141J-103Y	C R	10kΩ 1/4W	J
R0301-02	QRE141J-391Y	C R	390Ω 1/4W	J
R0303	QRE141J-471Y	C R	470Ω 1/4W	J
R0304	QRE141J-101Y	C R	100Ω 1/4W	J
R0305	QRE141J-472Y	C R	4.7kΩ 1/4W	J
R0306	QRE141J-272Y	C R	2.7kΩ 1/4W	J
R0307	QRE141J-224Y	C R	220kΩ 1/4W	J
R0309	QRE141J-103Y	C R	10kΩ 1/4W	J
R0310	QRE141J-223Y	C R	22kΩ 1/4W	J
R0311	QRE141J-684Y	C R	680kΩ 1/4W	J
R0312	QRE141J-103Y	C R	10kΩ 1/4W	J
R0313	QRE141J-101Y	C R	100Ω 1/4W	J
R0314	QRE141J-222Y	C R	2.2kΩ 1/4W	J
R0315	QRE141J-681Y	C R	680Ω 1/4W	J
R0316	QRE141J-101Y	C R	100Ω 1/4W	J
R0319	QRE141J-682Y	C R	6.8kΩ 1/4W	J
R0320	QRE141J-332Y	C R	3.3kΩ 1/4W	J
R0321-22	QRE141J-103Y	C R	10kΩ 1/4W	J
R0330	QRE141J-272Y	C R	2.7kΩ 1/4W	J
R0331	QRE141J-561Y	C R	560Ω 1/4W	J
R0332-33	QRE141J-102Y	C R	1kΩ 1/4W	J
R0334	QRE141J-152Y	C R	1.5kΩ 1/4W	J
R0335-36	QRE141J-332Y	C R	3.3kΩ 1/4W	J
R0337	QRE141J-272Y	C R	2.7kΩ 1/4W	J
R0338	QRE141J-821Y	C R	820Ω 1/4W	J
R0339-40	QRE141J-102Y	C R	1kΩ 1/4W	J
R0341	QRE141J-152Y	C R	1.5kΩ 1/4W	J
R0342-43	QRE141J-332Y	C R	3.3kΩ 1/4W	J
R0344-47	QRE141J-683Y	C R	68kΩ 1/4W	J

TRIMMER CAPACITOR

Symbol No.	Part No.	Part Name	Description
TC0303-04	QAT7003-450		45pF

CAPACITOR

Symbol No.	Part No.	Part Name	Description	Local
C0101	QETN1EM-476Z	E CAP.	47μF 25V	M
C0102	QETN1HM-106Z	E CAP.	10μF 50V	M
C0104	QFV71HJ-104Z	MF CAP.	0.1μF 50V	J
C0105	QENC1CM-336Z	BP E CAP.	33μF 16V	M
C0106-07	QFV71HJ-104Z	MF CAP.	0.1μF 50V	J
C0108	QETN1EM-476Z	E CAP.	47μF 25V	M
C0109	QENC1CM-336Z	BP E CAP.	33μF 16V	M
C0113	QFV71HJ-104Z	MF CAP.	0.1μF 50V	J
C0114	QENC1CM-336Z	BP E CAP.	33μF 16V	M
C0120	QETN1EM-476Z	E CAP.	47μF 25V	M
C0122	QFV71HJ-104Z	MF CAP.	0.1μF 50V	J
C0124	QFV71HJ-104Z	MF CAP.	0.1μF 50V	J
C0126	QFV71HJ-104Z	MF CAP.	0.1μF 50V	J
C0128	QFLC1HJ-103Z	M CAP.	0.01μF 50V	J
C0129	QETN1EM-476Z	E CAP.	47μF 25V	M
C0130-31	QCS31HJ-181Z	C CAP.	180pF 50V	J

CAPACITOR

⚠ Symbol No.	Part No.	Part Name	Description		Local
C0132	QETN1HM-105Z	E CAP.	1μF	50V	M
C0133	QCS31HJ-390Z	C CAP.	39pF	50V	J
C0135	QENC1HM-105Z	BP E CAP.	1μF	50V	M
C0136-37	QCS31HJ-181Z	C CAP.	180pF	50V	J
C0138	QETN1HM-105Z	E CAP.	1μF	50V	M
C0139	QCS31HJ-390Z	C CAP.	39pF	50V	J
C0141	QENC1HM-105Z	BP E CAP.	1μF	50V	M
C0142	QETN1EM-476Z	E CAP.	47μF	25V	M
C0143-44	QFV71HJ-104Z	MF CAP.	0.1μF	50V	J
C0150	QETN1HM-106Z	E CAP.	10μF	50V	M
C0151	QFV71HJ-104Z	MF CAP.	0.1μF	50V	J
C0152	QEHQ1EM-228	E CAP.	2200μF	25V	M
C0153	QETN1HM-106Z	E CAP.	10μF	50V	M
C0154	QFV71HJ-104Z	MF CAP.	0.1μF	50V	J
C0155	QETN1CM-107Z	E CAP.	100μF	16V	M
C0156-57	QFV71HJ-224Z	MF CAP.	0.22μF	50V	J
C0158	QETN1HM-106Z	E CAP.	10μF	50V	M
C0202	QFLC1HJ-103Z	M CAP.	0.01μF	50V	J
C0203	QFLC1HJ-102Z	M CAP.	1000pF	50V	J
C0204	QETN1HM-475Z	E CAP.	4.7μF	50V	M
C0205	QFLC1HJ-103Z	M CAP.	0.01μF	50V	J
C0206	QCS31HJ-6R0Z	C CAP.	6.0pF	50V	J
C0207	QFLC1HJ-103Z	M CAP.	0.01μF	50V	J
C0208	QEHR0JM-477Z	E CAP.	470μF	6.3V	M
C0209	QCS31HJ-100Z	C CAP.	10pF	50V	J
C0210	QFLC1HJ-102Z	M CAP.	1000pF	50V	J
C0211	QFLC1HJ-103Z	M CAP.	0.01μF	50V	J
C0212	QETN1EM-476Z	E CAP.	47μF	25V	M
C0213	QETN1HM-106Z	E CAP.	10μF	50V	M
C0214-15	QENC1CM-336Z	BP E CAP.	33μF	16V	M
C0216	QFLC1HJ-103Z	M CAP.	0.01μF	50V	J
C0217	QETN1HM-106Z	E CAP.	10μF	50V	M
C0218	QENC1CM-336Z	BP E CAP.	33μF	16V	M
C0219-20	QFV71HJ-104Z	MF CAP.	0.1μF	50V	J
C0221	QFLC1HJ-103Z	M CAP.	0.01μF	50V	J
C0222	QETN1EM-476Z	E CAP.	47μF	25V	M
C0223	QFLC1HJ-103Z	M CAP.	0.01μF	50V	J
C0224	QFV71HJ-104Z	MF CAP.	0.1μF	50V	J
C0225	QENC1CM-336Z	BP E CAP.	33μF	16V	M
C0301	QFLC1HJ-103Z	M CAP.	0.01μF	50V	J
C0302	QCS31HJ-151Z	C CAP.	150pF	50V	J
C0303	QCS31HJ-680Z	C CAP.	68pF	50V	J
C0304	QFLC1HJ-103Z	M CAP.	0.01μF	50V	J
C0305	QCS31HJ-221Z	C CAP.	220pF	50V	J
C0306	QFLC1HJ-273Z	M CAP.	0.027μF	50V	J
C0307	QFLC1HJ-103Z	M CAP.	0.01μF	50V	J
C0308	QETN1HM-474Z	E CAP.	0.47μF	50V	M
C0309	QFV71HJ-104Z	MF CAP.	0.1μF	50V	J
C0310	QETN1CM-107Z	E CAP.	100μF	16V	M
C0311-12	QFV71HJ-104Z	MF CAP.	0.1μF	50V	J
C0313	QENC1EM-106Z	BP E CAP.	10μF	25V	M
C0314	QFLC1HJ-103Z	M CAP.	0.01μF	50V	J
C0315	QFV71HJ-104Z	MF CAP.	0.1μF	50V	J
C0316	QCS31HJ-220Z	C CAP.	22pF	50V	J
C0318	QCS31HJ-100Z	C CAP.	10pF	50V	J
C0320	QCS31HJ-470Z	C CAP.	47pF	50V	J
C0321	QCS31HJ-6R0Z	C CAP.	6.0pF	50V	J
C0322	QCS31HJ-390Z	C CAP.	39pF	50V	J
C0323	QCS31HJ-181Z	C CAP.	180pF	50V	J
C0324	QCS31HJ-6R0Z	C CAP.	6.0pF	50V	J
C0325	QCS31HJ-390Z	C CAP.	39pF	50V	J
C0326	QCS31HJ-181Z	C CAP.	180pF	50V	J
C0327-28	QENC1EM-106Z	BP E CAP.	10μF	25V	M

TRANSFORMER

T0301	QQR1018-001	I.F.TRANSFORMER

COIL

⚠ Symbol No.	Part No.	Part Name	Description	Local
L0202	QQL244K-100Z	COIL	10μH	K
L0203-05	QQL244K-4R7Z	COIL	4.7μH	K
L0301	QQL244K-8R2Z	COIL	8.2μH	K
L0302-03	QQL244K-820Z	COIL	82μH	K

DIODE

D0101	1SS133-T2	SI.DIODE
D0102	1SS133-T2	SI.DIODE
D0103	1SS133-T2	SI.DIODE
D0104	1SS133-T2	SI.DIODE
D0105	1SS133-T2	SI.DIODE
D0106	1SS133-T2	SI.DIODE
D0107	1SS133-T2	SI.DIODE
D0108	1SS133-T2	SI.DIODE
D0109-10	MTZJ12C-T2	ZENER DIODE
D0111	MTZJ5.1B-T2	ZENER DIODE
D0112	1SS133-T2	SI.DIODE
D0113	1SS133-T2	SI.DIODE
D0201	1SS133-T2	SI.DIODE
D0202	1SS133-T2	SI.DIODE
D0203	1SS133-T2	SI.DIODE

TRANSISTOR

Q0101-03	2SC3311A/QR/-T	SI.TRANSISTOR
Q0104	2SA1309A/QR/-T	SI.TRANSISTOR
Q0105-06	2SC3311A/QR/-T	SI.TRANSISTOR
Q0110-11	2SC3311A/QR/-T	SI.TRANSISTOR
Q0112	2SA1309A/QR/-T	SI.TRANSISTOR
Q0113-15	2SC3311A/QR/-T	SI.TRANSISTOR
Q0116	2SA1309A/QR/-T	SI.TRANSISTOR
Q0117	2SC3311A/QR/-T	SI.TRANSISTOR
Q0120-21	2SC3311A/QR/-T	SI.TRANSISTOR
Q0123-24	2SC3311A/QR/-T	SI.TRANSISTOR
Q0203	2SC3311A/QR/-T	SI.TRANSISTOR
Q0205	DTC124ESA-T	DIGI.TRANSISTOR
Q0206-08	2SC3311A/QR/-T	SI.TRANSISTOR
Q0209	DTC124ESA-T	DIGI.TRANSISTOR
Q0301	DTC124ESA-T	DIGI.TRANSISTOR
Q0302-05	2SC3311A/QR/-T	SI.TRANSISTOR
Q0307-09	DTC124ESA-T	DIGI.TRANSISTOR

IC

IC0101-02	NJM2234D	I.C(MONO-ANA)
IC0103	BA12T	I.C(MONO-ANA)
IC0104	BA05T	I.C(MONO-ANA)
IC0201	NJM2240D	I.C(MONO-ANA)
IC0202	SBX1745-01	IFR DETECT UNIT
IC0203	NJM2234D	I.C(MONO-ANA)
IC0204	TC4053BP/N/	I.C(DIGI-MOS)
IC0301	AN5625N	I.C(MONO-ANA)

OTHERS

DL0201	CE42099-003	DELAY LINE
DL0301	CE41489-001	DELAY LINE (1H)
J0001-02	CEMB021-002	BNC CONNECTOR
J0003	QMD2B04-001	MINI CONNECTOR
J0004	CEMB021-002	BNC CONNECTOR
J0005	CEMN036-005	PIN JACK
S0301	QSS1A22-C04	SLIDE SWITCH
X0301	CE40668-001Z	CRYSTAL
X0302	CE40749-001Z	CRYSTAL

COMPO PW BOARD ASS'Y (FX-M016A) [IF-C01COMG]

VARIABLE RESISTOR

⚠ Symbol No.	Part No.	Part Name	Description	Local
VR0101	QVP0053-501Z	V R	500Ω	Y AMP
VR0102	QVP0053-501Z	V R	500Ω	B-Y AMP
VR0103	QVP0053-501Z	V R	500Ω	R-Y AMP

RESISTOR

⚠ Symbol No.	Part No.	Part Name	Description	Local
R0101	QRA14CF-75R0Y	MF R	75.0Ω 1/4W	F
R0104	QRE141J-101Y	C R	100Ω 1/4W	J
R0105	QRE141J-563Y	C R	56kΩ 1/4W	J
R0106	QRE141J-333Y	C R	33kΩ 1/4W	J
R0107	QRE141J-152Y	C R	1.5kΩ 1/4W	J
R0109	QRE141J-471Y	C R	470Ω 1/4W	J
R0111	QRE141J-473Y	C R	47kΩ 1/4W	J
R0112	QRE141J-471Y	C R	470Ω 1/4W	J
R0113	QRE141J-391Y	C R	390Ω 1/4W	J
R0114	QRE141J-101Y	C R	100Ω 1/4W	J
R0115	QRA14CF-75R0Y	MF R	75.0Ω 1/4W	F
R0118	QRE141J-101Y	C R	100Ω 1/4W	J
R0119	QRE141J-563Y	C R	56kΩ 1/4W	J
R0120	QRE141J-333Y	C R	33kΩ 1/4W	J
R0121	QRE141J-152Y	C R	1.5kΩ 1/4W	J
R0123	QRE141J-471Y	C R	470Ω 1/4W	J
R0125	QRE141J-473Y	C R	47kΩ 1/4W	J
R0126	QRE141J-471Y	C R	470Ω 1/4W	J
R0127	QRE141J-391Y	C R	390Ω 1/4W	J
R0128	QRE141J-101Y	C R	100Ω 1/4W	J
R0129	QRA14CF-75R0Y	MF R	75.0Ω 1/4W	F
R0132	QRE141J-101Y	C R	100Ω 1/4W	J
R0133	QRE141J-563Y	C R	56kΩ 1/4W	J
R0134	QRE141J-333Y	C R	33kΩ 1/4W	J
R0135	QRE141J-152Y	C R	1.5kΩ 1/4W	J
R0137	QRE141J-471Y	C R	470Ω 1/4W	J
R0139	QRE141J-473Y	C R	47kΩ 1/4W	J
R0140	QRE141J-471Y	C R	470Ω 1/4W	J
R0141	QRE141J-391Y	C R	390Ω 1/4W	J
R0142	QRE141J-101Y	C R	100Ω 1/4W	J
R0143-44	QRE141J-151Y	C R	150Ω 1/4W	J
R0146	QRE141J-101Y	C R	100Ω 1/4W	J
R0147-48	QRE141J-333Y	C R	33kΩ 1/4W	J
R0149	QRE141J-272Y	C R	2.7kΩ 1/4W	J
R0150	QRE141J-0R0Y	C R	0.0Ω 1/4W	J
R0152-53	QRE141J-151Y	C R	150Ω 1/4W	J
R0155	QRE141J-101Y	C R	100Ω 1/4W	J
R0156-57	QRE141J-333Y	C R	33kΩ 1/4W	J
R0158	QRE141J-272Y	C R	2.7kΩ 1/4W	J
R0159	QRE141J-0R0Y	C R	0.0Ω 1/4W	J
R0161-63	QRE141J-471Y	C R	470Ω 1/4W	J
R0164-66	QRE141J-563Y	C R	56kΩ 1/4W	J
R0202	QRE141J-102Y	C R	1kΩ 1/4W	J
R0203	QRE141J-563Y	C R	56kΩ 1/4W	J
R0204	QRE141J-683Y	C R	68kΩ 1/4W	J
R0205	QRE141J-272Y	C R	2.7kΩ 1/4W	J

CAPACITOR

⚠ Symbol No.	Part No.	Part Name	Description	Local
C0101-03	QETN1EM-476Z	E CAP.	47μF 25V	M
C0104-05	QETN1HM-106Z	E CAP.	10μF 50V	M
C0107	QETN1CM-107Z	E CAP.	100μF 16V	M
C0109	QETN1CM-107Z	E CAP.	100μF 16V	M
C0111	QETN1CM-107Z	E CAP.	100μF 16V	M
C0114	QFV71HJ-104Z	MF CAP.	0.1μF 50V	J
C0115	QETN1CM-107Z	E CAP.	100μF 16V	M
C0116-19	QFV71HJ-104Z	MF CAP.	0.1μF 50V	J
C0120	QETN1EM-476Z	E CAP.	47μF 25V	M
C0121	QFV71HJ-104Z	MF CAP.	0.1μF 50V	J
C0122	QETN1CM-107Z	E CAP.	100μF 16V	M
C0123	QFV71HJ-224Z	MF CAP.	0.22μF 50V	J
C0124-26	QCS31HJ-150Z	C CAP.	15pF 50V	J
C0201-02	QCS31HJ-181Z	C CAP.	180pF 50V	J
C0203	QETN1HM-105Z	E CAP.	1μF 50V	M
C0204	QCS31HJ-390Z	C CAP.	39pF 50V	J
C0205	QCS31HJ-181Z	C CAP.	180pF 50V	J
C0206	QFV71HJ-104Z	MF CAP.	0.1μF 50V	J
C0207	QETN1CM-107Z	E CAP.	100μF 16V	M

DIODE

⚠ Symbol No.	Part No.	Part Name
D0101-10	1SS133-T2	SI.DIODE
D0201	MTZJ12C-T2	ZENER DIODE

TRANSISTOR

⚠ Symbol No.	Part No.	Part Name
Q0101-03	2SC3311A/QR/-T	SI.TRANSISTOR
Q0104	2SA1309A/QR/-T	SI.TRANSISTOR
Q0105-07	2SC3311A/QR/-T	SI.TRANSISTOR
Q0108	2SA1309A/QR/-T	SI.TRANSISTOR
Q0109-11	2SC3311A/QR/-T	SI.TRANSISTOR
Q0112	2SA1309A/QR/-T	SI.TRANSISTOR
Q0113-14	2SC3311A/QR/-T	SI.TRANSISTOR
Q0201	2SC3311A/QR/-T	SI.TRANSISTOR

IC

⚠ Symbol No.	Part No.	Part Name
IC0101	BA12T	I.C(MONO-ANA)

OTHERS

⚠ Symbol No.	Part No.	Part Name
J0001-05	CEMB021-002	BNC CONNECTOR
J0006	CEMN079-002	PIN JACK

PACKING [OPTION]

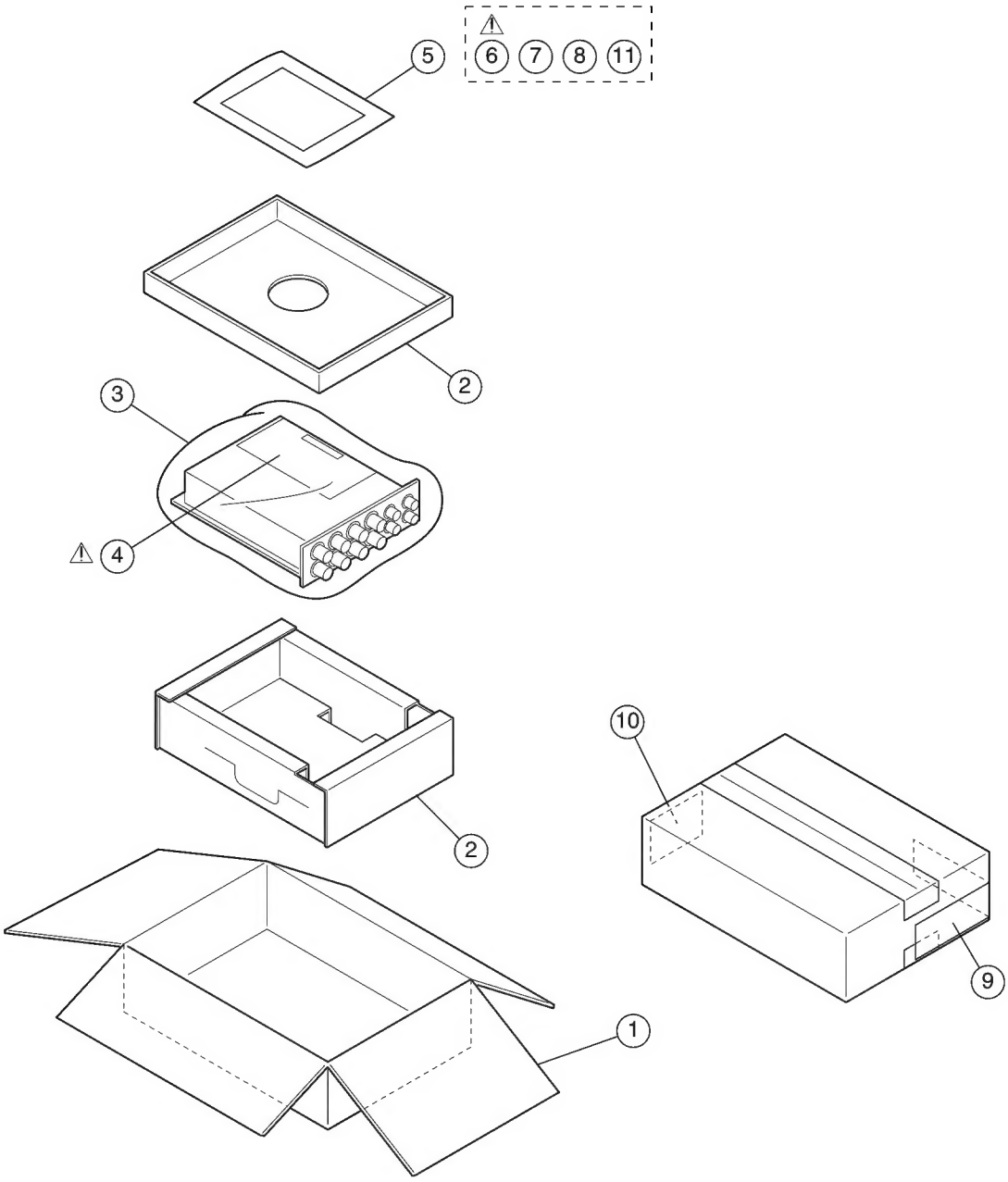

PACKING PARTS LIST [OPTION]

⚠	Ref.No.	Part No.	Part Name	Description	Local
	1	LC31249-001A	PACKING CAE		
	2	LC31248-001A	PACKING SHEET	4pcs in 1set	
	3	QPK02503505P	POLY BAG		
⚠	4	LC20856-001A-0L	RATING LABEL	[IF-C01PNG]	
⚠	4	LC20856-002A-0L	RATING LABEL	[IF-C01COMG]	
	5	QPA02503505P	POLY BAG		
⚠	6	LCT0972-001B	INST. BOOK		
	7	BT-51010-2	WARRANTY CARD		
	8	BT-51024-1	SERVICE INF CARD		
	9	LC31251-005A	PACKING LABEL	[IF-C01PNG]	
	9	LC31251-006A	PACKING LABEL	[IF-C01COMG]	
	10	CM47385-00A	POS/SERIAL LABEL		
	11	LC31584-001A	CAUTION SHEET		

SERVICE NOTE :

SERVICE NOTE :

DIMENSIONS

Unit : inch (mm)

< Front View >

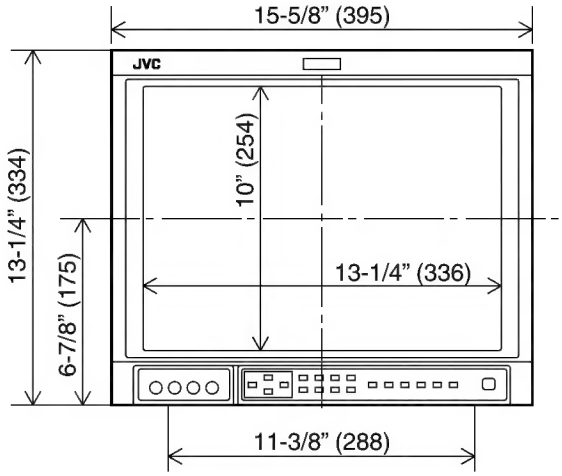

< Side View >

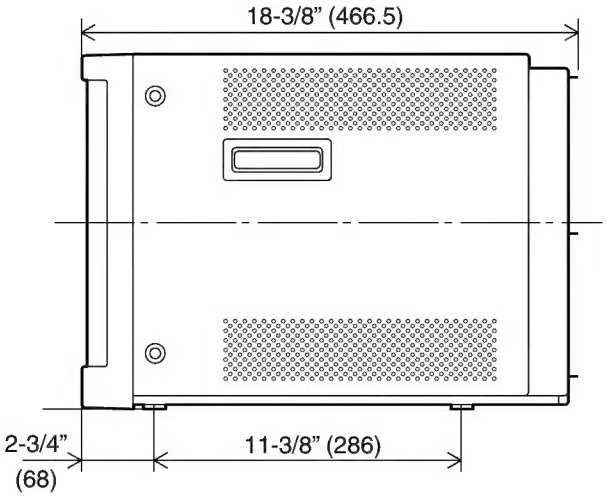

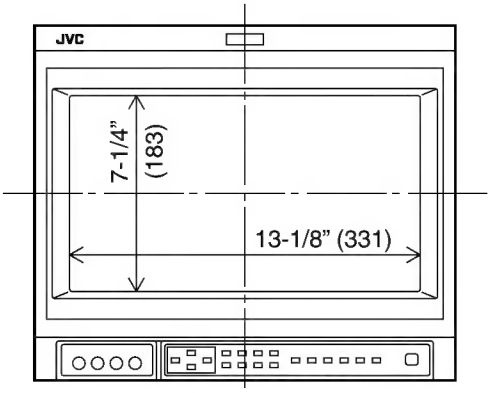

< Front View with the wide mask attached >